SPENCER | AIRCRAFT SUPPLY

REFERENCE GUIDE

WHOLESALE & RETAIL
HARDWARE & FASTENERS REFERENCE GUIDE

PIERCE COUNTY AIRPORT [KPLU]

16911 103RD AVE E PUYALLUP WA 98374

253-848-9349

Inches	Millimeters
1/64	.015625	.3969
1/32	.03125	.7938
3/64	.046875	1.1906
1/16	.0625	1.5875
5/64	.078125	1.9844
3/32	.09375	2.3813
7/64	.109375	2.7781
1/8	.125	3.1750
9/64	.140625	3.5719
5/32	.15625	3.9688
11/64	.171875	4.3656
3/16	.1875	4.7625
13/64	.203125	5.1594
7/32	.21875	5.5563
15/64	.234375	5.9531
1/4	.250	6.3500
17/64	.265625	6.7469
9/32	.28125	7.1438
19/64	.296875	7.5406
5/16	.3125	7.9375
21/64	.328125	8.3344
11/32	.34375	8.7313
23/64	.359375	9.1282
3/8	.375	9.5250
25/64	.390625	9.9219
13/32	.40625	10.3188
27/64	.421875	10.7157
7/16	.4375	11.1125
29/64	.453125	11.5094
15/32	.46875	11.9063
31/64	.484375	12.3032
1/2	.500	12.7001

Inches	Millimeters
33/64	.515625	13.0969
17/32	.53125	13.4938
35/64	.546875	13.8907
9/16	.5625	14.2876
37/64	.578125	14.6844
19/32	.59375	15.0813
39/64	.609375	15.4782
5/8	.625	15.8751
41/64	.640625	16.2719
21/32	.65625	16.6688
43/16	.671875	17.0657
11/16	.6875	17.4626
45/64	.703125	17.8594
23/32	.71875	18.2563
47/64	.734375	18.6532
3/4	.750	19.0501
49/64	.765625	19.4470
25/32	.78125	19.8438
51/64	.796875	20.2407
13/16	.8125	20.6376
53/64	.828125	21.0345
27/32	.84375	21.4313
55/64	.859375	21.8282
7/8	.875	22.2251
57/64	.890625	22.6220
29/32	.90625	23.0188
59/64	.921875	23.4157
15/16	.9375	23.8126
61/64	.953125	24.2095
31/32	.96875	24.6063
63/64	.984375	25.0032
1	1.000	25.4001

Spencer Aircraft Quality Policy

Spencer Aircraft Quality Policy

Spencer Aircraft strives for excellence in Customer Service. We have a Quality Assurance Policy that promotes knowledge and skill development, accuracy, and accountability to make sure the products you receive meet your standards for quality, arrive on time, and maximize your value.

Dear Valued Customer,

Spencer Aircraft was purchased in September 2011 by Rod Wetherbee; pilot, entrepreneur and local friend. Rod had envisioned unparalleled customer service to the general and commercial aviation industries. Today, with your help, we're making it happen!

With over 75 years of serving general and commercial aviation, industrial manufacturers and racing enthusiasts alike, Spencer Aircraft has become a leading supplier of hardware, fasteners, covering materials, avionics, aircraft lubricants and pilot supplies for the great northwest — and beyond!

Our staff is ready to help with all of your projects; from the fine-tuning touch-ups to complete overhauls.

We are available 6 days a week to help you find the part you need in the showroom, over the phone, or on the Web.
Our website, SpencerAircraft.com, is ready to serve you 24 hours a day. We will always make every effort to help you finish your project. Our large selection of hardware and pilot supplies are ready to ship the same day you place your order in most cases. If you need something that we do not stock, we will do the legwork and find it for you — allowing you to move on to your next project!

Spencer Aircraft works with multiple manufacturers to be able to offer exceptional part sourcing capabilities and competitive prices. As an added service, we offer custom kits (i.e. screws, bolts, cotter pins, washers, etc.) to help streamline your next build. We can create kits for any aviation project, large or small.

From our headquarters on historic Thun Field — Pierce County Airport, in Puyallup, WA (KPLU) - our company offers a full service FBO on a 3650-foot runway. Located within our building, we have Spencer Avionics, with experienced technicians ready to talk about scheduling your next transponder certification, pitot-static test or a panel upgrade. We also offer bench-repair capabilities.

Not a pilot yet? We can help remedy that issue. Drive down to our facility and talk to one of our many flight instructors at our sister company, Safety In Motion (SIM) Flight Center. SIM is a Part 141 FAA Certified flight school with onsite C.A.T.S. Testing Services and a RedBird FMX full motion flight simulator. SIM also offers competitive plane rental rates for pilots and students. Schedule a scenic flight around Mt. Rainier in one of SIM's many airplanes. Scenic flights make a great gift and gift cards are available! SIM Flight Center has an experienced staff of instructors available to help make your path to piloting convenient and pleasurable!

The next time you need aircraft parts, pilot supplies, avionics, flight instruction or just a cool place to land, choose Spencer Aircraft. Even if you are just browsing, have a question, or want to grab a quick cup of complimentary coffee, we would like to see you! Fly in, drive in, or walk in to see us!

Thank you for your continued support.
Rod Wetherbee and the staff at Spencer Aircraft Supply

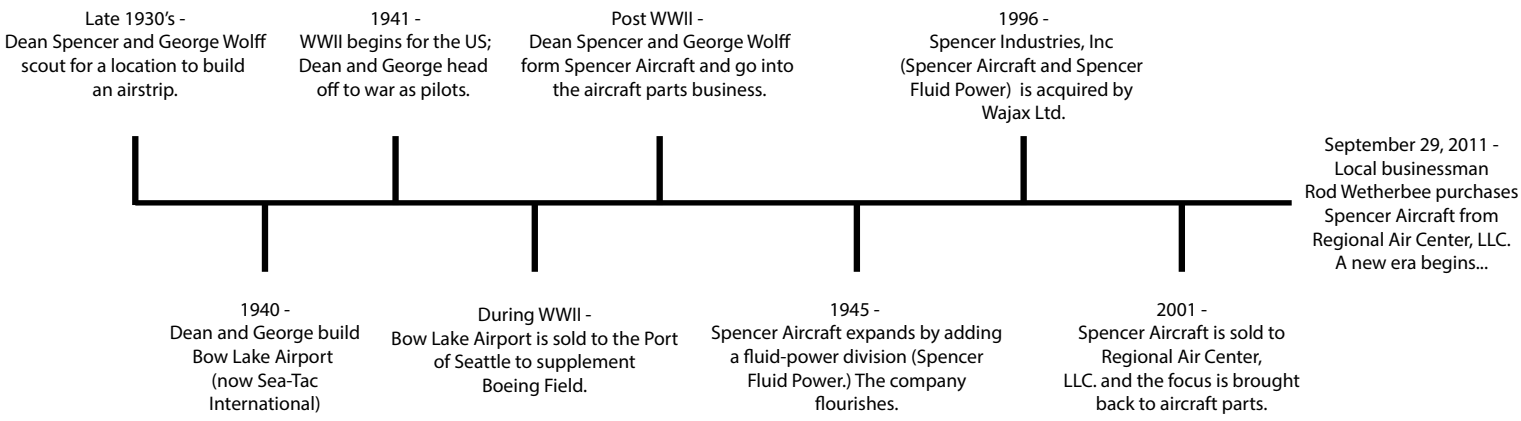

Spencer Aircraft provides the information in this catalog for its customers as a ***reference only*** and it is not intended for design or guarantee of accuracy. Though it is our policy to ship all orders in a timely manner, Spencer Aircraft cannot guarantee that all items will be in stock at all times.

TABLE OF CONTENTS

Aircraft Coverings

Ceconite 183

Poly-Fiber 180-182

Randolph 184-185

Aviation Headsets

ASA 193

David Clark 193

Batteries

Concorde Batteries 111

Gill Batteries 111

Bolts

AN Bolts 1-2

Clevis Bolts 9

Close Tolerance AN Bolts 5-6

Engine Bolts 7-8

Eye Bolts 3-4

Brakes

Cessna Reference 178

Cleveland Brake Linings 159

Kit Planes 174-175

McCauley Brakes 176-177

Rapco Brake Application Guide 160-173

Cable Terminals

Stud End, Swaged 71-72

Caps & Plugs

Plastic Caps & Plugs 120-123

Plug Buttons / Wilkie 118

Tapered Caps & Plugs 119

Chemicals

Dye Penetrants 124-126

Solvents 157

Strippers 157

1001 Alodine 157

1201 Alodine 157

33 Alumiprep 157

Acetone 157

Chemicals (cont…)

Klean Strip-X Stripper 157

Methyl Ethyl Ketone 157

Mineral Spirits 157

Paint Remover 157

PreKote 157

Toluol 157

Clamps

Cushioned Clamp 107

Fire Sleeved Clamp 105

Hose Clamps 108

Cleaners & Polishers

Aero International 158

Corrosion Technologies 158

Flitz 158

Nevr-Dull Polish 158

Poly Fiber 182, 185

Clevis

Clevis Bolts 9

Clevis Ends 73

Clevis Pins 33-34

Drill Bits

Center It V-Block Drill Press Fixture 136

Threaded Drill Bits 136

Electrical / Installation Supplies

AeroLEDs 139-143

Terminal Boots 110

Terminals/Splices 110

Wire 110

Fasteners

Camloc 80-82

Dzus 83-84

Filters

Brackett Air Filters 144-146

Champion Oil Filters 147-149

Tempest Oil Filters 150-152

Spencer Aircraft provides the information in this catalog for its customers as a ***reference only*** and it is not intended for design or guarantee of accuracy. Though it is our policy to ship all orders in a timely manner, Spencer Aircraft cannot guarantee that all items will be in stock at all times.

TABLE OF CONTENTS

Fittings

Grease Fittings 109
Hose Couplings 129
Hose Fittings 101-102
Hydraulic Fittings 86-92
Primer Fittings 86

Gaskets

Boss Gasket 127
Copper Crush Gasket 128
Metal Gasket 128
O-Rings 127

Grommets

Camloc Grommets 82
Dzus Grommets 83-84
Rubber Grommets 132

Hinges

Continuous Hinge 37
Extruded Hinge 38
Hinge Pin 36

Hoses

Assembly Instructions 101-102
Fire Sleeve Hose & Clamp 105
Hose & Ducting 106
Hose Fittings 104
Hose Straight-Reusable Adapter 94
Hydraulic Hose 103
Stratoflex / Aeroquip 95-102

Lubricants & Silicones

AeroShell 153-154, 156
AvBlend 156
CamGuard 156
LPS 156
Phillips 155-156

Miscellaneous

Avionics 192
Bags 193
Cross Check 57
Garmin 192
Kits 177
Tires 187-191
Tire Tubes 186

Mounts

Lord Engine Mounts 115-117

Nuts

Castellated Nuts 11, 16
Clip Nuts 22-23
Engine Nuts 15
Fiber / Nylon Insert Lock Nuts 13
Instrument Nuts 22
Internal Wrench 14
Jam Nuts 12, 16
Nut Plates 17-21
Plain Airframe Nuts 12
Rivet Nuts 25
Steel Lock Nuts 13-14
Tinnerman Nuts 24

Oil

Aeroshell 153-154, 156
Phillips 155-156

Pins

Clevis Pins 33-34
Cotter Pins 35
Hinge Pin 36

Pulleys

Bearing Control 79
Flight Control 78
Float Water/Phenolic 79
Heavy Duty 76
Secondary Control 78

Rivets

Aircraft Rivets / Solid 39-40
Cherry Lock Rivets 51-52
Cherry Max Rivets 45-46
Cherry Nut Plate Rivets 53-56
Cherry Pull-Thru Rivet 49-50
Cherry Self-Plugging 47-48

Spencer Aircraft provides the information in this catalog for its customers as a ***reference only*** and it is not intended for design or guarantee of accuracy. Though it is our policy to ship all orders in a timely manner, Spencer Aircraft cannot guarantee that all items will be in stock at all times.

TABLE OF CONTENTS

Rivets (cont…)

Pop Rivet 41-44

Reusable Sheet Fastener (Cleco) 133

Rivet Cutter 138

Rivet Retainer Spring 132

Riveting Tools 132

Rod Ends

Clevis Fork 73

Plain End Fork 73

Threaded Clevis Terminal 73

Threaded Rod End 73

Safety Wire

Safety Wire & Twister / Cutoff 10

Screws

American Standard Screws 135

Countersunk Screw 61-64, 67

Drive Screw 69

Fillister Head Screw 57

Pan Head 58-60, 66-67

Screw Head Reference Chart 57

Sheet Metal Screw 68

Truss Head, Structural Screw 65

Washer Head, Structural Screw 65

Seal & Channel

Chafe Seal 129

Cowl Seal 129

Neoprene Channel 129

Trim and Fairing Seal 129

Spark Plugs

Champion Spark Plug Application Chart 112-113

Tempest Spark Plug Application Chart 114

Tools

37 Degree Flaring Tool 85

Cable and Wire Cutters 138

Drill Bits 136

Drill Stops 138

Drill Duplicators 137

Tools (cont…)

Drill Press Fixture 136

Jigs 138

Rivet Cutter 138

Riveting Tools 132

Preval 138

Tubings

Seamless Rigid Aluminum Tubing 85

Turnbuckles

Barrel Turnbuckle 70

Cable Eye Turnbuckle 70

Fork Turnbuckle 70

Locking Clip for MS Turnbuckle Barrels 70

Pin Eye Turnbuckle 70

Valves

Dill Valve 131

Drain Valve 93

Strut Valve 130

Tank Valve 131

Valve Caps 130

Valve Cores 130

Washers

AN960 / NAS1149 Washer 26-28

AN970 Washer 26

Dimpled Washer 31

Finishing Washer 31

High Strength Washer 32

Lock Washer 29-30

Nylon Washer 31

Specialty Washers 31

Wire Rope

Flexible Wire Rope 76-77

Lockwire 10

Safety Wire 10

Safety Wire Tool 10

Shackle-Wire Rope 74

Sleeve Swaging Wire Rope 75

Thimble Wire Rope 75

Spencer Aircraft provides the information in this catalog for its customers as a ***reference only*** and it is not intended for design or guarantee of accuracy. Though it is our policy to ship all orders in a timely manner, Spencer Aircraft cannot guarantee that all items will be in stock at all times.

SPENCER | AIRCRAFT SUPPLY

PARTS SOURCING
Can't find the parts you need? Our highly skilled team may be able to find it for you. We are always glad to help locate those hard to find items.

HIGH AVAILABILITY
Spencer Aircraft is open 6 days a week, so there is always someone here to take your order and answer your questions.

SERVICE
Spencer Aircraft has been satisfying demanding hardware & aircraft needs for over 60 years. We stock 1,000's of items so we can make sure your order ships fast.

NOT JUST AIRCRAFT
We supply hardware to Automotive & Motorcycle Racing Teams who demand hardware that meets industrial and mil-spec standards.

Wholesale & Retail

We'll find those hard to find parts!

- **Avionics**
- **Hardware**
- **Fittings**
- **Oil & Lubricants**
- **Additives**
- **Batteries**
- **Brakes & Tires**
- **Tools**
- **Charts & Sectionals**
- **Custom Kits**
- **Pilot Supplies**
- **Headsets**
- **Device Mounts**
- **Flashlights**
- **Travel Supplies**
- **Portable Tables**
- **Lightweight Chairs**
- **Cleaners**

SAVE 15%

Use code **CATALOG2023** online and get 15% off your entire web order*

*Coupon expires 12/31/2023.
See terms and conditions on website. One use per customer

Pierce County Airport (KPLU)

Spencer Aircraft provides the information in this catalog for its customers as a ***reference only*** and it is not intended for design or guarantee of accuracy. Though it is our policy to ship all orders in a timely manner, Spencer Aircraft cannot guarantee that all items will be in stock at all times.

253-848-9349
SpencerAircraft.com

AN BOLTS

AN3 thru AN20

Thread Pitch / Hole Size

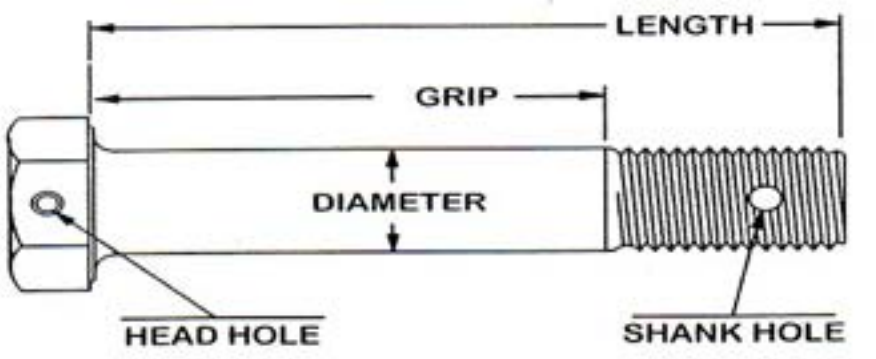



Help with the selection of Part Numbers:

The **first** number after "AN" designates the Diameter. The next symbol designates material and head drill if applicable.

Use (**-**) after the diameter for Steel with Cadmium II Plating. No hole in the head.
Use (**C**) in place of (**-**) for Corrosion Resistant Steel.
Use (**DD**) in place of (**-**) for Aluminum Alloy.
Add (**H**) in place of (**-**) or after (**C**) for a hole in the head.

The presence of the (**A**) at the very end of all the numbers means that there will be no hole in the shank.

The **last** number, either single or double digit denotes length. If it is a single digit this is the nominal length in 1/8" increments. If it is a two digit number, the first is whole inches, the second is additional 1/8" increments; this is a nominal sizing.

SEE THE CHARTS!

Examples of part numbers:

AN4-14	1/4 diameter	28 threads per inch	Steel, Cadmium II Plating	1.063 Grip	1.531 OAL	no hole in head, hole in shank
AN4-14A						no hole in head, no hole in shank
AN4H14						hole in head, hole in shank
AN4H14A						hole in head, no hole in shank
AN4C14			Corrosion Resistant Steel, Non-Plated			no hole in head, hole in shank
AN4C14A						no hole in head, no hole in shank
AN4CH14A						hole in head, hole in shank

		Width Across the Flats			Shank Hole	Head Hole	Commonly Used	Commonly Used
Base AN #	**Thread Pitch**	**Max**	**Min**	**Wrench Size**	**+.010, -.000**	**+.010, -.000**	**Steel Cotter**	**Stainless Cotter**
AN3	10-32	.377	.365	3/8	.070	.046	MS24665-132	MS24665-151
AN4	1/4-28	.440	.428	7/16	.076		MS24665-208	MS24665-227
AN5	5/16-24	.502	.490	1/2		.070		
AN6	3/8-24	.565	.553	9/16	.106		MS24665-283	MS24665-300
AN7	7/16-20	.627	.615	5/8				
AN8	1/2-20	.752	.740	3/4			MS24665-285	MS24665-302
AN9	9/16-18	.877	.865	7/8	.141		MS24665-353	MS24665-370
AN10	5/8-18	.940	.928	15/16			MS24665-355	MS24665-372
AN12	3/4-16	1.066	1.053	1-1/16				
AN14	7/8-14	1.253	1.240	1-1/4			MS24665-357	MS24665-374
AN17	1-12	1.441	1.428	1-1/2			MS24665-359	MS24665-376
AN18	1-1/8-12	1.628	1.615	1-5/8			MS24665-360 MS24665-360	MS24665-377
AN20	1-1/4-12	1.815	1.802	1-7/8				

NOTE: all dimensions in inches

253-848-9349
SpencerAircraft.com

Spencer Aircraft provides the information in this catalog for its customers as a ***reference only*** and it is not intended for design or guarantee of accuracy. Though it is our policy to ship all orders in a timely manner, Spencer Aircraft cannot guarantee that all items will be in stock at all times.

AN BOLTS

Grip Length / Overall Length

	Grip	OAL	Grip	OAL	Grip	OAL	Grip	OAL	Grip	OAL	Grip	OAL
Dash #	AN3-		AN4-		AN5-		AN6-		AN7-		AN8-	
3	0.063	0.469	0.063	0.469								
4	0.125	0.531	0.063	0.531	0.063	0.594						
5	0.250	0.656	0.188	0.656	0.188	0.719	0.063	0.703	0.063	0.719		
6	0.375	0.781	0.313	0.781	0.313	0.844	0.188	0.828	0.188	0.844	0.063	0.844
7	0.500	0.906	0.438	0.906	0.438	0.969	0.313	0.953	0.313	0.969	0.188	0.969
10	0.625	1.031	0.563	1.031	0.563	1.094	0.438	1.078	0.438	1.094	0.313	1.094
11	0.750	1.156	0.688	1.156	0.688	1.219	0.563	1.203	0.563	1.219	0.438	1.219
12	0.875	1.281	0.813	1.281	0.813	1.344	0.688	1.328	0.688	1.344	0.563	1.344
13	1.000	1.406	0.938	1.406	0.938	1.469	0.813	1.453	0.813	1.469	0.688	1.469
14	1.125	1.531	1.063	1.531	1.063	1.594	0.938	1.578	0.938	1.594	0.813	1.594
15	1.250	1.656	1.188	1.656	1.188	1.719	1.063	1.703	1.063	1.719	0.938	1.719
16	1.375	1.871	1.313	1.871	1.313	1.844	1.188	1.828	1.188	1.844	1.063	1.844
17	1.500	1.906	1.438	1.906	1.438	1.969	1.313	1.953	1.313	1.969	1.188	1.969
20	1.625	2.031	1.563	2.031	1.563	2.094	1.438	2.078	1.438	2.094	1.313	2.094
21	1.750	2.156	1.688	2.156	1.688	2.219	1.563	2.203	1.563	2.219	1.438	2.219
22	1.875	2.281	1.813	2.281	1.813	2.344	1.688	2.328	1.688	2.344	1.563	2.344
23	2.000	2.406	1.938	2.406	1.938	2.469	1.813	2.453	1.813	2.469	1.688	2.469
24	2.125	2.531	2.063	2.531	2.063	2.594	1.938	2.578	1.938	2.594	1.813	2.594
25	2.250	2.656	2.188	2.656	2.188	2.719	2.063	2.703	2.063	2.719	1.938	2.719
26	2.375	2.781	2.313	2.781	2.313	2.844	2.188	2.828	2.188	2.844	2.063	2.844
27	2.500	2.906	2.438	2.906	2.438	2.969	2.313	2.953	2.313	2.969	2.188	2.969
30	2.624	3.031	2.563	3.031	2.563	3.094	2.438	3.078	2.438	3.094	2.313	3.094
31	2.750	3.156	2.688	3.156	2.688	3.219	2.563	3.203	2.563	3.219	2.438	3.219
32	2.875	3.281	2.813	3.281	2.813	3.344	2.688	3.328	2.688	3.344	2.563	3.344
33	3.000	3.406	2.938	3.406	2.938	3.469	2.813	3.453	2.813	3.469	2.688	3.469
34	3.125	3.531	3.063	3.531	3.063	3.594	2.938	3.578	2.938	3.594	2.813	3.594
35	3.250	3.656	3.188	3.656	3.188	3.719	3.063	3.703	3.063	3.719	2.938	3.719
36	3.375	3.781	3.313	3.781	3.313	3.844	3.188	3.828	3.188	3.844	3.063	3.844
37	3.500	3.906	3.438	3.906	3.438	3.969	3.313	3.953	3.313	3.969	3.188	3.969
40	3.625	4.031	3.563	4.031	3.563	4.094	3.438	4.078	3.438	4.094	3.313	4.094
41	3.750	4.156	3.688	4.156	3.688	4.219	3.563	4.203	3.563	4.219	3.438	4.219
42	3.875	4.281	3.813	4.281	3.813	4.344	3.688	4.328	3.688	4.344	3.563	4.344
43	4.000	4.406	3.938	4.406	3.938	4.469	3.813	4.453	3.813	4.469	3.688	4.469
44	4.125	4.531	4.063	4.531	4.063	4.594	3.938	4.578	3.938	4.594	3.813	4.594
45	4.250	4.656	4.188	4.656	4.188	4.719	4.063	4.703	4.063	4.719	3.938	4.719
46	4.375	4.781	4.313	4.781	4.313	4.844	4.188	4.828	4.188	4.844	4.063	4.844
47	4.500	4.906	4.438	4.906	4.438	4.969	4.313	4.953	4.313	4.969	4.188	4.969
50	4.625	5.031	4.563	5.031	4.563	5.094	4.438	5.078	4.438	5.094	4.313	5.094
51	4.750	5.156	4.688	5.156	4.688	5.219	4.563	5.203	4.563	5.219	4.438	5.219
52	4.875	5.281	4.813	5.281	4.813	5.344	4.688	5.328	4.688	5.344	4.563	5.344
53	5.000	5.406	4.938	5.406	4.938	5.469	4.813	5.453	4.813	5.469	4.688	5.469
54	5.125	5.531	5.063	5.531	5.063	5.594	4.938	5.578	4.938	5.594	4.813	5.594
55	5.250	5.656	5.188	5.656	5.188	5.719	5.063	5.703	5.063	5.719	4.938	5.719
56	5.375	5.781	5.313	5.781	5.313	5.844	5.188	5.828	5.188	5.844	5.063	5.844
57	5.500	5.906	5.438	5.906	5.438	5.969	5.313	5.953	5.313	5.969	5.188	5.969
60	5.625	6.031	5.563	6.031	5.563	6.094	5.438	6.078	5.438	6.094	5.313	6.094
61	5.750	6.156	5.688	6.156	5.688	6.219	5.563	6.203	5.563	6.219	5.438	6.219
62	5.875	6.281	5.813	6.281	5.813	6.344	5.688	6.328	5.688	6.344	5.563	6.344
63	6.000	6.406	5.938	6.406	5.938	6.469	5.813	6.453	5.813	6.469	5.688	6.469
64	6.125	6.531	6.063	6.531	6.063	6.594	5.938	6.578	5.938	6.594	5.813	6.594
65	6.250	6.656	6.188	6.656	6.188	6.719	6.063	6.703	6.063	6.719	5.938	6.719
66	6.375	6.781	6.313	6.781	6.313	6.844	6.188	6.828	6.188	6.844	6.063	6.844
67	6.500	6.906	6.438	6.906	6.438	6.969	6.313	6.953	6.313	6.969	6.188	6.969
70	6.625	7.031	6.563	7.031	6.563	7.094	6.438	7.078	6.438	7.094	6.313	7.094
71	6.750	7.156	6.688	7.156	7.656	7.219	6.563	7.203	6.563	7.219	6.438	7.219
72	6.875	7.281	6.813	7.281	6.813	7.344	6.688	7.328	6.688	7.344	6.563	7.344
73	7.000	7.406	6.938	7.406	6.938	7.469	6.813	7.453	6.813	7.469	6.688	7.469
74	7.125	7.531	7.063	7.531	7.063	7.594	6.938	7.578	6.938	7.594	6.813	7.594
75	7.250	7.656	7.188	7.656	7.188	7.719	7.063	7.703	7.063	7.719	6.938	7.719
76	7.375	7.781	7.313	7.781	7.313	7.844	7.188	7.828	7.188	7.844	7.063	7.844
77	7.500	7.906	7.438	7.906	7.438	7.969	7.313	7.953	7.313	7.969	7.188	7.969
80	7.625	8.031	7.563	8.031	7.563	8.094	7.438	8.078	7.438	8.094	7.313	8.094

Spencer Aircraft provides the information in this catalog for its customers as a ***reference only*** and it is not intended for design or guarantee of accuracy. Though it is our policy to ship all orders in a timely manner, Spencer Aircraft cannot guarantee that all items will be in stock at all times.

AN EYE BOLTS

AN42 thru AN49

Thread Pitch / Hole Size

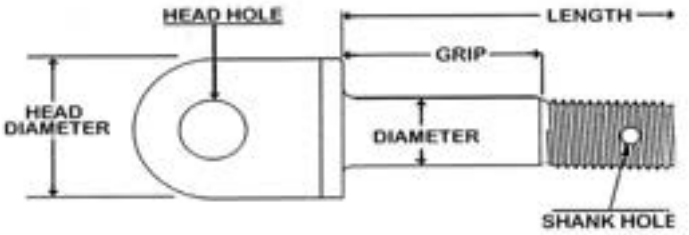

Help with the selection of Part Numbers:

The **first** number after (AN4#) designates thread size.

The **second** symbol or letter (**C** or **-**) designates material.
The (**B)** *always* falls after **AN42** & **AN43**. It denotes a revision in hole size after 1982.
The (**-**) follows the basic number to designate Steel.
Use **C** in place of (**-**), or after **B**, for Corrosion Resistant Steel.
The presence of the (**A**) at the very end of all the numbers means that there will be no hole in the shank.

The **last** number, either single or double digit denotes length. If it is a single digit this is the nominal length in 1/8" increments. If it is a two digit number, the first is whole inches, the second is additional 1/8" increments; this is a nominal sizing.

SEE THE CHARTS!

Examples of part numbers:

AN43B14	1/4 diameter	28 threads per inch	Steel, Cadmium II plating	1.063 Grip	1.531 OAL	no hole in head, hole in shank
AN43B14A						no hole in head, no hole in shank
AN43BC14			Corrosion resistant steel, Non-Plated			no hole in head, hole in shank
AN43BC14A						no hole in head, on hole in shank

		Shank Diameter			Shank Hole	Head Hole	Commonly Used	Commonly Used
AN # Basic	**Thread Pitch**	**Max**	**Min**	**Head Diameter**	**+.010, -.010**	**Nominal**	**Steel Cotter**	**Stainless Cotter**
AN42B	10-32	.189	.186	7/16	.070	3/16	MS24665-132	MS24665-151
AN43B	1/4-28	.249	.246	1/2	.076			
AN44	5/16-24	.312	.309	5/8		1/4	MS24665-210	MS24665-229
AN45				11/16		5/16		
AN46	3/8-24	.374	.371	3/4	.106	3/8	MS24665-283	MS24665-300
AN47	7/16-20	.437	.433	7/8				
AN48	1/2-20	.499	.495	1	.106	7/16	MS24665-285	MS24665-302
AN49	9/16-18	.562	.558	1-3/16	.141	1/2	MS24665-355	MS24665-372

NOTE: all dimensions in inches



Spencer Aircraft provides the information in this catalog for its customers as a ***reference only*** and it is not intended for design or guarantee of accuracy. Though it is our policy to ship all orders in a timely manner, Spencer Aircraft cannot guarantee that all items will be in stock at all times.

AN EYE BOLTS

Grip Length / Overall Length

Dash #	Grip	OAL	Grip	OAL	Grip	OAL	Grip	OAL	Grip	OAL	Grip	OAL	Grip	OAL
	AN42B-		AN43B-		AN44, 45-		AN46-		AN47-		AN48-		AN49-	
3	0.063	0.469	0.063	0.469										
4	0.125	0.531	0.063	0.531	0.063	0.594								
5	0.250	0.656	0.188	0.656	0.188	0.719	0.063	0.703	0.063	0.719				
6	0.375	0.781	0.313	0.781	0.313	0.844	0.188	0.828	0.188	0.844	0.063	0.844	0.062	1.016
7	0.500	0.906	0.438	0.906	0.438	0.969	0.313	0.953	0.313	0.969	0.188	0.969	0.125	1.094
10	0.625	1.031	0.563	1.031	0.563	1.094	0.438	1.078	0.438	1.094	0.313	1.094	0.250	1.219
11	0.750	1.156	0.688	1.156	0.688	1.219	0.563	1.203	0.563	1.219	0.438	1.219	0.375	1.344
12	0.875	1.281	0.813	1.281	0.813	1.344	0.688	1.328	0.688	1.344	0.563	1.344	0.500	1.469
13	1.000	1.406	0.938	1.406	0.938	1.469	0.813	1.453	0.813	1.469	0.688	1.469	0.625	1.594
14	1.125	1.531	1.063	1.531	1.063	1.594	0.938	1.578	0.938	1.594	0.813	1.594	0.750	1.719
15	1.250	1.656	1.188	1.656	1.188	1.719	1.063	1.703	1.063	1.719	0.938	1.719	0.875	1.844
16	1.375	1.781	1.313	1.781	1.313	1.844	1.188	1.828	1.188	1.844	1.063	1.844	1.000	1.969
17	1.500	1.906	1.438	1.906	1.438	1.969	1.313	1.953	1.313	1.969	1.188	1.969	1.125	2.094
20	1.625	2.031	1.563	2.031	1.563	2.094	1.438	2.078	1.438	2.094	1.313	2.094	1.250	2.219
21	1.750	2.156	1.688	2.156	1.688	2.219	1.563	2.203	1.563	2.219	1.438	2.219	1.375	2.344
22	1.875	2.281	1.813	2.281	1.813	2.344	1.688	2.328	1.688	2.344	1.563	2.344	1.500	2.469
23	2.000	2.406	1.938	2.406	1.938	2.469	1.813	2.453	1.813	2.469	1.688	2.469	1.625	2.594
24	2.125	2.531	2.063	2.531	2.063	2.594	1.938	2.578	1.938	2.594	1.813	2.594	1.750	2.719
25	2.250	2.656	2.188	2.656	2.188	2.719	2.063	2.703	2.063	2.719	1.938	2.719	1.875	2.844
26	2.375	2.781	2.313	2.781	2.313	2.844	2.188	2.828	2.188	2.844	2.063	2.844	2.000	2.969
27	2.500	2.906	2.438	2.906	2.438	2.969	2.313	2.953	2.313	2.969	2.188	2.969	2.125	3.094
30	2.625	3.031	2.563	3.031	2.563	3.094	2.438	3.078	2.438	3.094	2.313	3.094	2.250	3.219
31	2.750	3.156	2.688	3.156	2.688	3.219	2.563	3.203	2.563	3.219	2.438	3.219	2.375	3.344
32	2.875	3.281	2.813	3.281	2.813	3.344	2.688	3.328	2.688	3.344	2.563	3.344	2.500	3.469
33	3.000	3.406	2.938	3.406	2.938	3.469	2.813	3.453	2.813	3.469	2.688	3.469	2.625	3.594
34	3.125	3.531	3.063	3.531	3.063	3.594	2.938	3.578	2.938	3.594	2.813	3.594	2.750	3.719
35	3.250	3.656	3.188	3.656	3.188	3.719	3.063	3.703	3.063	3.719	2.938	3.719	2.875	3.844
36	3.375	3.781	3.313	3.781	3.313	3.844	3.188	3.828	3.188	3.844	3.063	3.844	3.000	3.969
37	3.500	3.906	3.438	3.906	3.438	3.969	3.313	3.953	3.313	3.969	3.188	3.969	3.125	4.094
40	3.625	4.031	3.563	4.031	3.563	4.094	3.438	4.078	3.438	4.094	3.313	4.094	3.250	4.219
41	3.750	4.156	3.688	4.156	3.688	4.219	3.563	4.203	3.563	4.219	3.438	4.219	3.375	4.344
42	3.875	4.281	3.813	4.281	3.813	4.344	3.688	4.328	3.688	4.344	3.563	4.344	3.500	4.469
43	4.000	4.406	3.938	4.406	3.938	4.469	3.813	4.453	3.813	4.469	3.688	4.469	3.625	4.594
44	4.125	4.531	4.063	4.531	4.063	4.594	3.938	4.578	3.938	4.594	3.813	4.594	3.750	4.719
45	4.250	4.656	4.188	4.656	4.188	4.719	4.063	4.703	4.063	4.719	3.938	4.719	3.875	4.844
46	4.375	4.781	4.313	4.781	4.313	4.844	4.188	4.828	4.188	4.844	4.063	4.844	4.000	4.969
47	4.500	4.906	4.438	4.906	4.438	4.969	4.313	4.953	4.313	4.969	4.188	4.969	4.125	5.094
50	4.625	5.031	4.563	5.031	4.563	5.094	4.438	5.078	4.438	5.094	4.313	5.094	4.250	5.219
51	4.750	5.156	4.688	5.156	4.688	5.219	4.563	5.203	4.563	5.219	4.438	5.219	4.375	5.344
52	4.875	5.281	4.813	5.281	4.813	5.344	4.688	5.328	4.688	5.344	4.563	5.344	4.500	5.469
53	5.000	5.406	4.938	5.406	4.938	5.469	4.813	5.453	4.813	5.469	4.688	5.469	4.625	5.594
54	5.125	5.531	5.063	5.531	5.063	5.594	4.938	5.578	4.938	5.594	4.813	5.594	4.750	5.719
55	5.250	5.656	5.188	5.656	5.188	5.719	5.063	5.703	5.063	5.719	4.938	5.719	4.875	5.844
56	5.375	5.781	5.313	5.781	5.313	5.844	5.188	5.828	5.188	5.844	5.063	5.844	5.000	5.969
57	5.500	5.906	5.438	5.906	5.438	5.969	5.313	5.953	5.313	5.969	5.188	5.969	5.125	6.094
60	5.625	6.031	5.563	6.031	5.563	6.094	5.438	6.078	5.438	6.094	5.313	6.094	5.250	6.219
61	5.750	6.156	5.688	6.156	5.688	6.219	5.563	6.203	5.563	6.219	5.438	6.219	5.375	6.344
62	5.875	6.281	5.813	6.281	5.813	6.344	5.688	6.328	5.688	6.344	5.563	6.344	5.500	6.469
63	6.000	6.406	5.938	6.406	5.938	6.469	5.813	6.453	5.813	6.469	5.688	6.469	5.625	6.594
64	6.125	6.531	6.063	6.531	6.063	6.594	5.938	6.578	5.938	6.594	5.813	6.594	5.750	6.719
65	6.250	6.656	6.188	6.656	6.188	6.719	6.063	6.703	6.063	6.719	5.938	6.719	5.875	6.844
66	6.375	6.781	6.313	6.781	6.313	6.844	6.188	6.828	6.188	6.844	6.063	6.844	6.000	6.969
67	6.500	6.906	6.438	6.906	6.438	6.969	6.313	6.953	6.313	6.969	6.188	6.969	6.125	7.094
70	6.625	7.031	6.563	7.031	6.563	7.094	6.438	7.078	6.438	7.094	6.313	7.094	6.250	7.219
71	6.750	7.156	6.688	7.156	6.688	7.219	6.563	7.203	6.563	7.219	6.438	7.219	6.375	7.344
72	6.875	7.281	6.813	7.281	6.813	7.344	6.688	7.328	6.688	7.344	6.563	7.344	6.500	7.469
73	7.000	7.406	6.938	7.406	6.938	7.469	6.813	7.453	6.813	7.469	6.688	7.469	6.625	7.594
74	7.125	7.531	7.063	7.531	7.063	7.594	6.938	7.578	6.938	7.594	6.813	7.594	6.750	7.719
75	7.250	7.656	7.188	7.656	7.188	7.719	7.063	7.703	7.063	7.719	6.938	7.719	6.875	7.844
76	7.375	7.781	7.313	7.781	7.313	7.844	7.188	7.828	7.188	7.844	7.063	7.844	7.000	7.969
77	7.500	7.906	7.438	7.906	7.438	7.969	7.313	7.953	7.313	7.969	7.188	7.969	7.125	8.094
80	7.625	8.031	7.563	8.031	7.563	8.094	7.438	8.078	7.438	8.094	7.313	8.094	7.250	8.219

Spencer Aircraft provides the information in this catalog for its customers as a ***reference only*** and it is not intended for design or guarantee of accuracy. Though it is our policy to ship all orders in a timely manner, Spencer Aircraft cannot guarantee that all items will be in stock at all times.

CLOSE TOLERANCE AN BOLTS

AN173 thru AN186

Thread Pitch / Hole Size

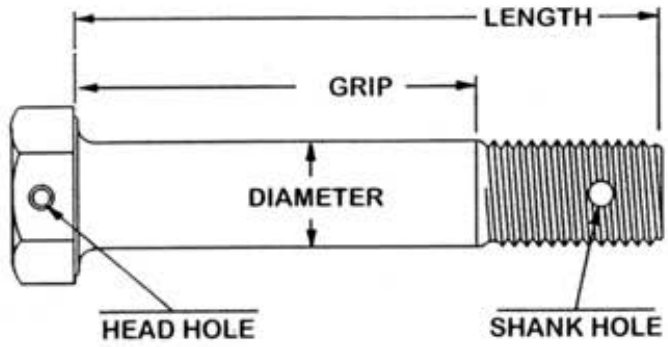



Raised or Depressed "Dash" for Corrosion Resistant Bolts

Help with the selection of Part Numbers:

The **first** number after "AN17" designates the diameter.
The **next** symbol designates material & head drill if applicable.

Use (**-**) after the diameter for Steel with Cadmium II Plating. No hole in the head.
Use (**C**) in place of (**-**) for Corrosion Resistant Steel.
Use (**DD**) in place of (**-**) for Aluminum Alloy.
Add (**H**) in place of (**-**) or after (**C**) for a hole in the head.

The presence of the (**A**) at the very end of all the numbers means that there will be no hole in the shank.

The **last** number, either single or double digit denotes length. If it is a single digit this is the nominal length in 1/8" increments. If it is a two digit number, the first is whole inches, the second is additional 1/8" increments; this is a nominal sizing.

SEE THE CHARTS!

Prior to April of 1990, this series of bolts in the steel material were manufactured with non-plated shanks. If a non-plated fastener was removed, it should be replaced with a plated fastener.

Examples of Part Numbers:

AN174-14	1/4 diameter	28 threads per inch	Steel, Cadmium II Plating	1.063 Grip	1.531 OAL	no hole in head, hole in shank
AN174-14A						no hole in head, no hole in shank
AN174H14						hole in head, hole in shank
AN174H14A						hole in head, no hole in shank
AN174C14			Corrosion Resistant Steel, Non-Plated			no hole in head, hole in shank
AN174C14A						no hole in head, no hole in shank
AN174CH14A						hole in head, hole in shank

		Shank Diameter			Shank Hole	Head Hole	Commonly Used	Commonly Used
AN # Basic	**Thread Pitch**	**Max**	**Min**	**Wrench Size**	**+.010, -.010**	**Nominal**	**Steel Cotter**	**Stainless Cotter**
AN173	10-32	.1894	.1889	3/8	.070	.046	MS24665-132	MS24665-151
AN174	1/4-28	.2492	.2487	7/16	.076			
AN175	5/16-24	.3117	.3112	1/2		.070	MS24665-210	MS24665-229
AN176	3/8-24	.3742	.3737	9/16	.106		MS24665-283	MS24665-300
AN177	7/16-20	.4367	.4362	5/8				
AN178	1/2-20	.4991	.4986	3/4			MS24665-285	MS24665-302
AN180	5/8-18	.6240	.6234	15/16	.141		MS24665-355	MS24665-372

NOTE: all dimensions in inches

Spencer Aircraft provides the information in this catalog for its customers as a ***reference only*** and it is not intended for design or guarantee of accuracy. Though it is our policy to ship all orders in a timely manner, Spencer Aircraft cannot guarantee that all items will be in stock at all times.

CLOSE TOLERANCE AN BOLTS

Grip Length / Overall Length

Dash #	Grip	OAL	Grip	OAL	Grip	OAL	Grip	OAL	Grip	OAL	Grip	OAL	Grip	OAL
	AN173-		AN174-		AN175-		AN176-		AN177-		AN178-		AN180-	
	+-1/64	+1/32,-1/64	+-1/64	+1/32,-1/64	+-1/64	+1/32,-1/64	+-1/64	+1/32,-1/64	+-1/64	+1/32,-1/64	+-1/64	+1/32,-1/64	+-1/64	+1/32,-1/64
3	0.063	0.469	0.063	0.469										
4	0.125	0.531	0.063	0.531	0.063	0.594								
5	0.250	0.656	0.188	0.656	0.188	0.719	0.063	0.703	0.063	0.719				
6	0.375	0.781	0.313	0.781	0.313	0.844	0.188	0.828	0.188	0.844	0.063	0.844		
7	0.500	0.906	0.438	0.906	0.438	0.969	0.313	0.953	0.313	0.969	0.188	0.969	0.062	1.016
10	0.625	1.031	0.563	1.031	0.563	1.094	0.438	1.078	0.438	1.094	0.313	1.094	0.188	1.410
11	0.750	1.156	0.688	1.156	0.688	1.219	0.563	1.203	0.563	1.219	0.438	1.219	0.313	1.535
12	0.875	1.281	0.813	1.281	0.813	1.344	0.688	1.328	0.688	1.344	0.563	1.344	0.438	1.660
13	1.000	1.406	0.938	1.406	0.938	1.469	0.813	1.453	0.813	1.469	0.688	1.469	0.563	1.785
14	1.125	1.531	1.063	1.531	1.063	1.594	0.938	1.578	0.938	1.594	0.813	1.594	0.688	1.910
15	1.250	1.656	1.188	1.656	1.188	1.719	1.063	1.703	1.063	1.719	0.938	1.719	0.813	2.035
16	1.375	1.781	1.313	1.781	1.313	1.844	1.188	1.828	1.188	1.844	1.063	1.844	0.938	2.160
17	1.500	1.906	1.438	1.906	1.438	1.969	1.313	1.953	1.313	1.969	1.188	1.969	1.063	2.285
20	1.625	2.031	1.563	2.031	1.563	2.094	1.438	2.078	1.438	2.094	1.313	2.094	1.188	2.410
21	1.750	2.156	1.688	2.156	1.688	2.219	1.563	2.203	1.563	2.219	1.438	2.219	1.313	2.535
22	1.875	2.281	1.813	2.281	1.813	2.344	1.688	2.328	1.688	2.344	1.563	2.344	1.438	2.660
23	2.000	2.406	1.938	2.406	1.938	2.469	1.813	2.453	1.813	2.469	1.688	2.469	1.563	2.785
24	2.125	2.531	2.063	2.531	2.063	2.594	1.938	2.578	1.938	2.594	1.813	2.594	1.688	2.910
25	2.250	2.656	2.188	2.656	2.188	2.719	2.063	2.703	2.063	2.719	1.938	2.719	1.813	3.035
26	2.375	2.781	2.313	2.781	2.313	2.844	2.188	2.828	2.188	2.844	2.063	2.844	1.938	3.160
27	2.500	2.906	2.438	2.906	2.438	2.969	2.313	2.953	2.313	2.969	2.188	2.969	2.063	3.285
30	2.625	3.031	2.563	3.031	2.563	3.094	2.438	3.078	2.438	3.094	2.313	3.094	2.188	3.410
31	2.750	3.156	2.688	3.156	2.688	3.219	2.563	3.203	2.563	3.219	2.438	3.219	2.313	3.535
32	2.875	3.281	2.813	3.281	2.813	3.344	2.688	3.328	2.688	3.344	2.563	3.344	2.438	3.660
33	3.000	3.406	2.938	3.406	2.938	3.469	2.813	3.453	2.813	3.469	2.688	3.469	2.563	3.785
34	3.125	3.531	3.063	3.531	3.063	3.594	2.938	3.578	2.938	3.594	2.813	3.594	2.688	3.910
35	3.250	3.656	3.188	3.656	3.188	3.719	3.063	3.703	3.063	3.719	2.938	3.719	2.813	4.035
36	3.375	3.781	3.313	3.781	3.313	3.844	3.188	3.828	3.188	3.844	3.063	3.844	2.938	4.160
37	3.500	3.906	3.438	3.906	3.438	3.969	3.313	3.953	3.313	3.969	3.188	3.969	3.063	4.285
40	3.625	4.031	3.563	4.031	3.563	4.094	3.438	4.078	3.438	4.094	3.313	4.094	3.188	4.410
41	3.750	4.156	3.688	4.156	3.688	4.219	3.563	4.203	3.563	4.219	3.438	4.219	3.313	4.535
42	3.875	4.281	3.813	4.281	3.813	4.344	3.688	4.328	3.688	4.344	3.563	4.344	3.438	4.660
43	4.000	4.406	3.938	4.406	3.938	4.469	3.813	4.453	3.813	4.469	3.688	4.469	3.563	4.785
44	4.125	4.531	4.063	4.531	4.063	4.594	3.938	4.578	3.938	4.594	3.813	4.594	3.688	4.910
45	4.250	4.656	4.188	4.656	4.188	4.719	4.063	4.703	4.063	4.719	3.938	4.719	3.813	5.035
46	4.375	4.781	4.313	4.781	4.313	4.844	4.188	4.828	4.188	4.844	4.063	4.844	3.938	5.160
47	4.500	4.906	4.438	4.906	4.438	4.969	4.313	4.953	4.313	4.969	4.188	4.969	4.063	5.285
50	4.625	5.031	4.563	5.031	4.563	5.094	4.438	5.078	4.438	5.094	4.313	5.094	4.188	5.410
51	4.750	5.156	4.688	5.156	4.688	5.219	4.563	5.203	4.563	5.219	4.438	5.219	4.313	5.535
52	4.875	5.281	4.813	5.281	4.813	5.344	4.688	5.328	4.688	5.344	4.563	5.344	4.438	5.660
53	5.000	5.406	4.938	5.406	4.938	5.469	4.813	5.453	4.813	5.469	4.688	5.469	4.563	5.785
54	5.125	5.531	5.063	5.531	5.063	5.594	4.938	5.578	4.938	5.594	4.813	5.594	4.688	5.910
55	5.250	5.656	5.188	5.656	5.188	5.719	5.063	5.703	5.063	5.719	4.938	5.719	4.813	6.035
56	5.375	5.781	5.313	5.781	5.313	5.844	5.188	5.828	5.188	5.844	5.063	5.844	4.938	6.160
57	5.500	5.906	5.438	5.906	5.438	5.969	5.313	5.953	5.313	5.969	5.188	5.969	5.063	6.285
60	5.625	6.031	5.563	6.031	5.563	6.094	5.438	6.078	5.438	6.094	5.313	6.094	5.188	6.410
61	5.750	6.156	5.688	6.156	5.688	6.219	5.563	6.203	5.563	6.219	5.438	6.219	5.313	6.535
62	5.875	6.281	5.813	6.281	5.813	6.344	5.688	6.328	5.688	6.344	5.563	6.344	5.438	6.660
63	6.000	6.406	5.938	6.406	5.938	6.469	5.813	6.453	5.813	6.469	5.688	6.469	5.563	6.785
64	6.125	6.531	6.063	6.531	6.063	6.594	5.938	6.578	5.938	6.594	5.813	6.594	5.688	6.910
65	6.250	6.656	6.188	6.656	6.188	6.719	6.063	6.703	6.063	6.719	5.938	6.719	5.813	7.035
66	6.375	6.781	6.313	6.781	6.313	6.844	6.188	6.828	6.188	6.844	6.063	6.844	5.938	7.160
67	6.500	6.906	6.438	6.906	6.438	6.969	6.313	6.953	6.313	6.969	6.188	6.969	6.063	7.285
70	6.625	7.031	6.563	7.031	6.563	7.094	6.438	7.078	6.438	7.094	6.313	7.094	6.188	7.410
71	6.750	7.156	6.688	7.156	6.688	7.219	6.563	7.203	6.563	7.219	6.438	7.219	6.313	7.535
72	6.875	7.281	6.813	7.281	6.813	7.344	6.688	7.328	6.688	7.344	6.563	7.344	6.438	7.660
73	7.000	7.406	6.938	7.406	6.938	7.469	6.813	7.453	6.813	7.469	6.688	7.469	6.563	7.785
74	7.125	7.531	7.063	7.531	7.063	7.594	6.938	7.578	6.938	7.594	6.813	7.594	6.688	7.910
75	7.250	7.656	7.188	7.656	7.188	7.719	7.063	7.703	7.063	7.719	6.938	7.719	6.813	8.035
76	7.375	7.781	7.313	7.781	7.313	7.844	7.188	7.828	7.188	7.844	7.063	7.844	6.938	8.160
77	7.500	7.906	7.438	7.906	7.438	7.969	7.313	7.953	7.313	7.969	7.188	7.969	7.063	8.285
80	7.625	8.031	7.563	8.031	7.563	8.094	7.438	8.078	7.438	8.094	7.313	8.094	7.188	8.410

Spencer Aircraft provides the information in this catalog for its customers as a ***reference only*** and it is not intended for design or guarantee of accuracy. Though it is our policy to ship all orders in a timely manner, Spencer Aircraft cannot guarantee that all items will be in stock at all times.

MS20073 & MS20074 SERIES

Engine Bolt Supersedes AN73 thru AN81 Fine & AN73A thru AN81A Coarse

Thread Pitch / Hole Size

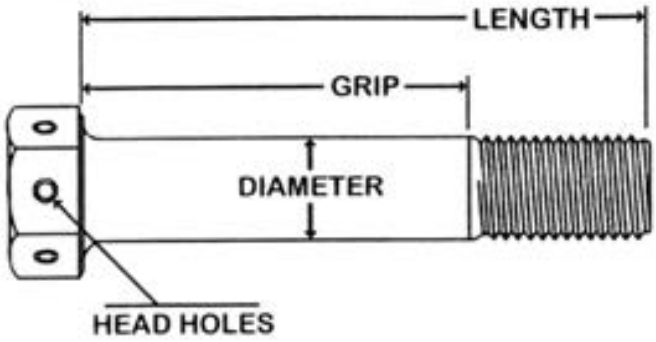

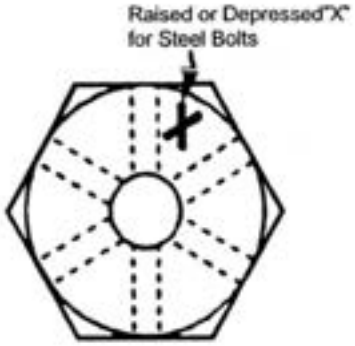

Help with the selection of Part Numbers:

PLEASE NOTE: In this series, the (**-**) is used solely as a symbol of separation in the total part number as opposed to being a primary member of the part number.

The **last two digits** of the first series of letters and numbers define the threading. For Example, MS20073 denotes a fine thread while MS20074 denotes a coarse thread.

The **second set** of numbers separated from the thread definition by a (**-**) denotes the thread.
The **final set** of numbers separated from the diameter definition by a (**-**) denotes length. Of this set, the first is whole inches, the second is additional 1/8" increments; this is a nominal sizing.

All parts in this series are comprised of Alloy Steel per Mil-B-6812 with a strength of 125,000 psi minimum tensile. All bolts in this series are Cadmium II Plated.

Converting "AN" numbers: In the "**AN"** series, the **(-**) symbol denotes fine threading while the letter **"A"** denotes coarse threading. The second digit after AN indicates a diameter to the 1/16" **except** for part **AN81** which is 3/4" in diameter.

SEE THE CHARTS!

Examples of Part Numbers:

MS20073-04-14	1/4 diameter	28 threads per inch	Steel, Cadmium II plating	1.000 Grip	1.531 OAL	hole in head
MS20073-06-27	3/8 diameter	24 threads per inch		2.500 Grip	2.922 OAL	
MS20074-04-14	1/4 diameter	20 threads per inch		1.000 Grip	1.531 OAL	
MS20074-06-27	3/8 diameter	16 threads per inch		2.500 Grip	2.922 OAL	

	MS20073	MS20074	Shank Diameter			Head Height		
Diameter	**Thread Pitch**	**Thread Pitch**	**Max**	**Min**	**Wrench Size**	**Max**	**Min**	**Head Hole +/-.005**
03	10-32	10-24	.189	.186	3/8	.203	.172	.070
04	1/4-28	1/4-20	.249	.246	7/16	.234	.203	
05	5/16-24	5/16-18	.312	.309	1/2	.297	.266	
06	3/8-24	3/8-16	.374	.371	9/16			
07	7/16-20	7/16-14	.437	.433	5/8	.344	.313	
08	1/2-20	1/2-13	.499	.495	3/4	.391	.359	
09	9/16-18	9/16-12	.562	.558	7/8	.438	.406	
10	5/8-18	5/8-11	.624	.620	15/16	.484	.453	
12	3/4-16	3/4-10	.749	.744	1-1/16	.578	.547	

NOTE: all dimensions in inches

Spencer Aircraft provides the information in this catalog for its customers as a ***reference only*** and it is not intended for design or guarantee of accuracy. Though it is our policy to ship all orders in a timely manner, Spencer Aircraft cannot guarantee that all items will be in stock at all times.

MS20073 & MS20074 SERIES

Grip Length / Overall Length

Dash #	Grip	OAL	Grip	OAL	Grip	OAL	Grip	OAL	Grip	OAL	Grip	OAL	Grip	OAL	Grip	OAL	Grip	OAL
	-03		-04		-05		-06		-07		-08		-09		-10		-12	
	±.016	+.031 -.016	±.016	+.031 -.016	±.016	+.031 -.016	±.016	+.031 -.016	±.016	+.031 -.016	±.016	+.031 -.016	±.016	+.031 -.016	±.016	+.031 -.016	±.016	+.031 -.016
02	0.062	0.344																
03	0.062	0.469	0.062	0.469														
04	0.062	0.594	0.062	0.594	0.062	0.609												
05	0.125	0.656	0.125	0.656	0.125	0.672	0.062	0.734										
06	0.250	0.781	0.250	0.781	0.125	0.797	0.125	0.797	0.062	0.797								
07	0.375	0.906	0.375	0.906	0.375	0.922	0.250	0.922	0.188	0.922								
10	0.500	1.031	0.500	1.031	0.500	1.047	0.375	1.047	0.312	1.047	0.250	1.047						
11	0.625	1.156	0.625	1.156	0.625	1.172	0.500	1.172	0.438	1.172	0.375	1.172						
12	0.750	1.281	0.750	1.281	0.750	1.297	0.625	1.297	0.562	1.297	0.500	1.297	0.438	1.312				
13	0.875	1.406	0.875	1.406	0.875	1.422	0.750	1.422	0.688	1.422	0.625	1.422	0.562	1.438				
14	1.000	1.531	1.000	1.531	1.000	1.547	0.875	1.547	0.812	1.547	0.750	1.547	0.688	1.562	0.562	1.562		
15	1.125	1.656	1.125	1.656	1.125	1.672	1.000	1.672	0.938	1.672	0.875	1.672	0.812	1.688	0.688	1.688		
16	1.250	1.781	1.250	1.781	1.250	1.797	1.125	1.797	1.062	1.797	1.000	1.797	0.938	1.812	0.812	1.812	0.750	1.813
17	1.375	1.906	1.375	1.906	1.375	1.922	1.250	1.922	1.188	1.922	1.125	1.922	1.062	1.938	0.938	1.938	0.875	1.938
20	1.500	2.031	1.500	2.031	1.500	2.047	1.375	2.047	1.312	2.047	1.250	2.047	1.188	2.063	1.063	2.063	1.000	2.063
21	1.625	2.156	1.625	2.156	1.625	2.172	1.500	2.172	1.438	2.172	1.375	2.172	1.312	2.188	1.188	2.188	1.125	2.188
22	1.750	2.281	1.750	2.281	1.750	2.297	1.625	2.297	1.562	2.297	1.500	2.297	1.438	2.312	1.312	2.312	1.250	2.312
23	1.875	2.406	1.875	2.406	1.875	2.422	1.750	2.422	1.688	2.422	1.625	2.422	1.562	2.438	1.438	2.438	1.375	2.438
24	2.000	2.561	2.000	2.531	2.000	2.547	1.875	2.547	1.813	2.547	1.750	2.547	1.688	2.562	1.562	2.563	1.500	2.562
25	2.125	2.656	2.125	2.656	2.125	2.672	2.000	2.672	1.938	2.672	1.875	2.672	1.812	2.688	1.688	2.688	1.625	2.688
26	2.250	2.781	2.250	2.781	2.250	2.797	2.125	2.797	2.063	2.797	2.000	2.797	1.938	2.812	1.812	2.812	1.750	2.812
27	2.375	2.906	2.375	2.906	2.375	2.922	2.250	2.922	2.188	2.922	2.125	2.922	2.062	2.938	1.938	2.938	1.875	2.938
30	2.500	3.031	2.500	3.031	2.500	3.049	2.375	3.049	2.313	3.047	2.250	3.047	2.188	3.062	2.062	3.062	2.000	3.063
31	2.625	3.156	2.625	3.156	2.625	3.172	2.500	3.172	2.438	3.172	2.375	3.172	2.312	3.188	2.188	3.188	2.125	3.188
32	2.750	3.281	2.750	3.281	2.750	3.297	2.625	3.297	2.563	3.297	2.500	3.297	2.438	3.312	2.312	3.312	2.250	3.313
33	2.875	3.406	2.875	3.406	2.875	3.422	2.750	3.422	2.688	3.422	2.625	3.422	2.562	3.438	2.438	3.438	2.375	3.438
34	3.000	3.531	3.000	3.531	3.000	3.547	2.875	3.547	2.813	3.547	2.750	3.547	2.688	3.562	2.562	3.562	2.500	3.562
35	3.125	3.656	3.125	3.656	3.125	3.672	3.000	3.672	2.938	3.672	2.875	3.672	2.812	3.688	2.688	3.688	2.625	3.688
36	3.250	3.781	3.250	3.781	3.250	3.797	3.125	3.797	3.063	3.797	3.000	3.797	2.938	3.812	2.812	3.812	2.750	3.812
37	3.375	3.906	3.375	3.906	3.375	3.922	3.250	3.922	3.188	3.922	3.125	3.922	3.062	3.938	2.938	3.938	2.875	3.938
40	3.500	4.031	3.500	4.031	3.500	4.047	3.375	4.047	3.313	4.047	3.250	4.047	3.188	4.063	3.062	4.062	3.000	4.063
41	3.625	4.156	3.625	4.156	3.625	4.172	3.500	4.172	3.438	4.172	3.375	4.172	3.312	4.188	3.188	4.188	3.125	4.188
42	3.750	4.281	3.750	4.261	3.750	4.297	3.625	4.297	3.563	4.297	3.500	4.297	3.438	4.312	3.312	4.312	3.250	4.312
43	3.875	4.406	3.875	4.406	3.875	4.422	3.750	4.422	3.688	4.422	3.675	4.422	3.562	4.438	3.438	4.438	3.375	4.438
44	4.000	4.531	4.000	4.531	4.000	4.547	3.875	4.547	3.813	4.547	3.750	4.547	3.688	4.562	3.562	4.562	3.500	4.562
45	4.125	4.656	4.125	4.656	4.125	4.672	4.000	4.672	3.938	4.672	3.875	4.672	3.812	4.688	3.688	4.688	3.625	4.688
46	4.250	4.781	4.250	4.781	4.250	4.797	4.125	4.797	4.063	4.797	4.000	4.797	3.938	4.812	3.812	4.812	3.750	4.813
47	4.375	4.906	4.375	4.906	4.375	4.922	4.250	4.922	4.188	4.922	4.125	4.922	4.062	4.938	3.938	4.938	3.875	4.938
50	4.500	5.031	4.500	5.031	4.500	5.047	4.375	5.047	4.313	5.047	4.250	5.047	4.188	5.062	4.062	5.062	4.000	5.062
51	4.625	5.156	4.625	5.156	4.675	5.172	4.500	5.172	4.438	5.172	4.375	5.172	4.312	5.188	4.188	5.188	4.125	5.188
52	4.750	5.281	4.750	5.281	4.750	5.297	4.625	5.297	4.563	5.297	4.500	5.297	4.438	5.312	4.312	5.312	4.250	5.312
53	4.875	5.406	4.875	5.406	4.875	5.422	4.750	5.422	4.688	5.422	4.625	5.422	4.562	5.438	4.438	5.438	4.375	5.438
54	5.000	5.531	5.000	5.531	5.000	5.547	4.875	5.547	4.813	5.547	4.750	5.547	4.688	5.562	4.562	5.562	4.500	5.562
55	5.125	5.656	5.125	5.656	5.125	5.672	5.000	5.672	4.938	5.672	4.875	5.672	4.812	5.688	4.688	5.688	4.625	5.688
56	5.250	5.781	5.250	5.781	5.250	5.797	5.125	5.797	5.063	5.797	5.000	5.797	4.938	5.812	4.812	5.812	4.750	5.812
57	5.375	5.906	5.375	5.906	5.375	5.922	5.250	5.922	5.188	5.922	5.125	5.922	5.062	5.938	4.938	5.938	4.875	5.938
60	5.500	6.031	5.500	6.031	5.500	6.047	5.375	6.047	5.313	6.047	5.250	6.047	5.188	6.016	5.062	6.062	5.000	6.062

Spencer Aircraft provides the information in this catalog for its customers as a ***reference only*** and it is not intended for design or guarantee of accuracy. Though it is our policy to ship all orders in a timely manner, Spencer Aircraft cannot guarantee that all items will be in stock at all times.

AN CLEVIS BOLTS

AN21 thru AN37

Thread Pitch / Hole Size
Grip Length / Overall Length

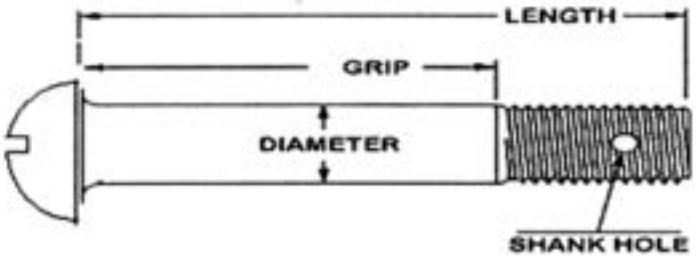

Help with the selection of Part Numbers:

The **first** number after "AN" designates the thread size.
The **second** symbol designates material.

Use (**-**) after the diameter for Steel, Cadmium II Plated.
The presence of the (**A**) at the very end of all the numbers means that there will be no hole in the shank.
The **last** number**,** either single or double digits, denotes nominal overall length from under the head 1/16" increments, not including the amount for standard washer allowance.

SEE THE CHARTS!

Examples of part numbers:

AN24-16	1/4 diameter	28 threads per inch	Steel, Cadmium II Plating	.688 Grip	1.033 OAL	hole in shank
AN24-16A						no hole in shank

AN # Basic	Thread Pitch	Shank Diameter +.000,-.002	Shank Hole +.010, -.000	Head Diameter	Nylon Locknut	Castle Nut	Commonly Used Steel Cotter	Commonly Used Stainless Cotter
AN23	10-32	.186	.070	3/8	MS21083N3	AN320-3	MS24665-132	MS24665-151
AN24	1/4-28	.248	.076	1/2	MS21083N4	AN320-4	MS24665-132	MS24665-151
AN25	5/16-24	.311		5/8	MS21083N5	AN320-5	MS24665-210	MS24665-229
AN26	3/8-24	.373	.106	11/16	MS21083N6	AN320-6	MS24665-283	MS24665-300

	AN23		AN24		AN25		AN26	
Dash #	GRIP	OAL	GRIP	OAL	GRIP	OAL	GRIP	OAL
8	0.188	0.531	0.188	0.531				
9	0.250	0.594	0.250	0.594	0.250	0.594	0.250	0.594
10	0.313	0.656	0.313	0.656	0.313	0.656	0.313	0.656
11	0.375	0.719	0.375	0.719	0.375	0.719	0.375	0.719
12	0.438	0.781	0.438	0.781	0.438	0.781	0.438	0.781
13	0.500	0.844	0.500	0.844	0.500	0.844	0.500	0.844
14	0.563	0.908	0.563	0.908	0.563	0.908	0.563	0.908
15	0.625	0.969	0.625	0.969	0.625	0.969	0.625	0.969
16	0.688	1.031	0.688	1.031	0.688	1.031	0.688	1.031
17	0.750	1.094	0.750	1.094	0.750	1.094	0.750	1.094
18	0.813	1.158	0.813	1.158	0.813	1.158	0.813	1.158
19	0.875	1.219	0.875	1.219	0.875	1.219	0.875	1.219
20	0.938	1.281	0.938	1.281	0.938	1.281	0.938	1.281
21	1.000	1.344	1.000	1.344	1.000	1.344	1.000	1.344
22	1.063	1.408	1.063	1.408	1.063	1.408	1.063	1.408
23	1.125	1.489	1.125	1.489	1.125	1.489	1.125	1.489
24	1.188	1.531	1.188	1.531	1.188	1.531	1.188	1.531
25	1.250	1.594	1.250	1.594	1.250	1.594	1.250	1.594
26	1.313	1.656	1.313	1.656	1.313	1.656	1.313	1.656
27	1.375	1.719	1.375	1.719	1.375	1.719	1.375	1.719
28	1.438	1.781	1.438	1.781	1.438	1.781	1.438	1.781
29	1.500	1.844	1.500	1.844	1.500	1.844	1.500	1.844
30	1.563	1.908	1.563	1.908	1.563	1.908	1.563	1.908
31	1.625	1.969	1.625	1.969	1.625	1.969	1.625	1.969
32	1.688	2.031	1.688	2.031	1.688	2.031	1.688	2.031
33	1.750	2.094	1.750	2.094	1.750	2.094	1.750	2.094
34	1.813	2.158	1.813	2.158	1.813	2.158	1.813	2.158
35	1.875	2.219	1.875	2.219	1.875	2.219	1.875	2.219
36	1.938	2.281	1.938	2.281	1.938	2.281	1.938	2.281
37	2.000	2.344	2.000	2.344	2.000	2.344	2.000	2.344
38	2.063	2.408	2.063	2.408	2.063	2.408	2.063	2.408
39	2.125	2.489	2.125	2.489	2.125	2.489	2.125	2.489
40	2.188	2.531	2.188	2.531	2.188	2.531	2.188	2.531

NOTE: all dimensions in inches

253-848-9349
SpencerAircraft.com

Spencer Aircraft provides the information in this catalog for its customers as a ***reference only*** and it is not intended for design or guarantee of accuracy. Though it is our policy to ship all orders in a timely manner, Spencer Aircraft cannot guarantee that all items will be in stock at all times.

MS20995 Series

Safety Wire - Lock Wire

304 Stainless - Inconel



Material Selection: (XX)

MS20995 CY Copper Cadmium Plated

MS20995 C (diameter) 304 Stainless Steel, not temperature rated

MS20995 N (diameter) Inconel for use at temperature 700° F. & above

We stock for immediate shipping:
MS20995, C20, C25, C32, C41, & C51

ASK ABOUT CASE PRICING

Part Number	Diameter	Material	Approx. Length (Ft.)
MS20995CY15	.015	Copper Cadmium Plated	
MS20995CY20	.020	Copper Cadmium Plated	
MS20995C10	.010	Stainless Steel	
MS20995C20	.020	Stainless Steel	700
MS20995C20-5	.020	Stainless Steel	3,500
MS20995C20-321	.020	Stainless Steel	700
MS20995C25	.025	Stainless Steel	600
MS20995C32	.032	Stainless Steel	366
MS20995C32-10	.032	Stainless Steel	3,660
MS20995C32-321	.032	Stainless Steel	366
MS20995C40	.040	Stainless Steel	
MS20995C41	.041	Stainless Steel	223
MS20995C41-5	.041	Stainless Steel	1,115
MS20995C41-321	.041	Stainless Steel	223
MS20995C51	.051	Stainless Steel	144
MS20995C51-5	.051	Stainless Steel	720
MS20995C62	.062	Stainless Steel	
MS20995N20	.020	Inconel	
MS20995N25	.025	Inconel	
MS20995N32	.032	Inconel	
MS20995N40	.040	Inconel	
MS20995NC32	.032	Monel	
MS20995NC32-5	.032	Monel	
MS20995NC40	.040	Monel	
MS20995NC62	.062	Monel	
4362MS20995C32-MALIN	.032	Stainless Steel	

MS20995(XX)25	MS20995(XX)32	MS20995(XX)41
.025” diameter for small screws with hole diameter of less than .045”	.32” diameter general purpose #10 to 3/8” diameter bolts secondary turnbuckles	.041” diameter primary turnbuckles propeller bolts large fasteners



SAFETY WIRE TWISTER / CUTOFF
A one-hand operated wire twister with automatic spring return. Squeeze, press button & it locks. Squeeze again & it unlocks. Tapered jaws for easy access. Instant return drive clutch for smooth operation & longer life. 6” & 9”

Spencer Aircraft provides the information in this catalog for its customers as a ***reference only*** and it is not intended for design or guarantee of accuracy. Though it is our policy to ship all orders in a timely manner, Spencer Aircraft cannot guarantee that all items will be in stock at all times.

AN310

Supersedes AN355

Plain - Castellated - Full Height

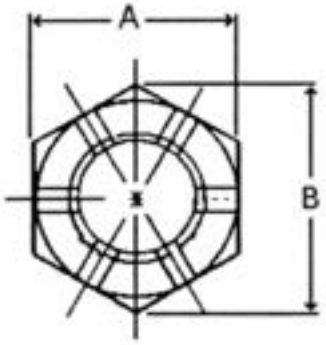

Add (D) in place of the (-) for Aluminum Alloy

Add (C) in place of the (-) for Stainless Steel

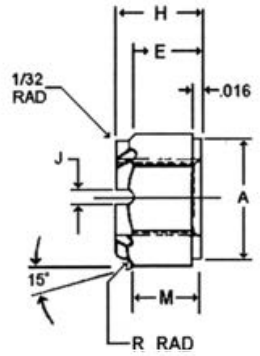

Ultimate Tensile Strength
Minimum in Pounds

AN Part #	Thread (UNF-3B)	Steel	Alum. Alloy	A	B	E	H	J +1/32, -.000	M	R
AN310-3	10-32	2.210	1.100	.375 (+.002/-.010)	7/16	7/64	1/4		.110	
AN310-4	1/4-28	4.080	2.030	.438 (+.002/-.010)	1/2	1/8	9/32	5/64	.125	
AN310-5	5/16-24	6.500	3.220	.500 (+.002/-.010)	37/64	11/64	21/64		.172	3/32
AN310-6	3/8-24	10.100	5.020	.563 (+.002/-.010)	21/32	7/32	13/32		.218	
AN310-7	7/16-20	13.600	6.750	.625 (+.002/-.011)	23/32	17/64	29/64	1/8	.265	
AN310-8	1/2-20	18.500	9.180	.750 (+.002/-.012)	7/8	23/64	6/16		.359	1/8
AN310-9	9/16-18	23.600	11.700	.875 (+.002/-.014)	1-1/64	25/64	39/64		.390	5/32
AN310-10	5/8-18	30.100	14.900	1.000 (+.002/-.016)	1-5/32	15/32	23/32		.468	
AN310-12	3/4-16	44.000	21.800	1.125 (+.002/-.016)	1-19/64	9/16	13/16		.562	
AN310-14	7/8-14	60.000	29.800	1.313 (+.002/-.017)	1-33/64	21/32	29/32	5/32	.656	3/16
AN310-15	1-12	80.700	40.000	1.500 (+.002/-.017)	1-47/64	3/4	1		.750	
AN310-18	1-1/8-12	101.800	50.500	1.688 (+.002/-.021)	1-61/64	13/16	1-5/32		.844	1/4
AN310-20	1-1/4-12	130.200	64.400	1.875 (+.002/-.023)	2-11/64	7/8	1-1/4		.938	

AN320

Plain - Castellated - Shear Nut

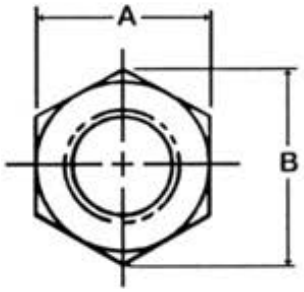

Add (D) in place of the (-) for Aluminum Alloy

Add (C) in place of the (-) for Stainless Steel

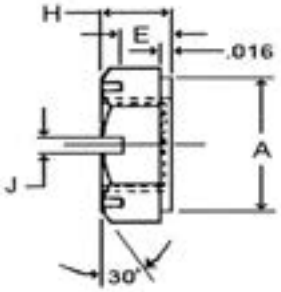

Ultimate Tensile Strength
Minimum in Pounds

AN Part #	Thread (UNF-3B)	Steel	Alum. Alloy	A	B	E	H	J +.031, -.000
AN310-1	6-40			.313 (+.002/-.010)	.359	.078	.156	.078
AN320-2	8-36			.344 (+.002/-.010)	.391			.078
AN320-3	10-32	1,105	550	.375 (+.002/-.010)	.438			.078
AN320-4	1/4-28	2,040	1,015	.438 (+.002/-.010)	.500	.094	.188	.078
AN320-5	5/16-24	3,250	1,610	.500 (+.002/-.010)	.578			.078
AN320-6	3/8-24	5,050	2,510	.563 (+.002/-.010)	.656	.109	.219	.078
AN320-7	7/16-20	6,800	3,375	.625 (+.002/-.011)	.719			.125
AN320-8	1/2-20	9,250	4,590	.750 (+.002/-.012)	.875	.141	.250	.125
AN320-9	9/16-18	11,800	5,850	.875 (+.002/-.012)	1.016	.188	.313	.156
AN320-10	5/8-18	15,050	7,450	1.000 (+.002/-.014)	1.156			.156
AN320-12	3/4-16	22,000	10,900	1.125 (+.002/-.016)	1.297	.250	.375	.156
AN320-14	7/8-14	30,000	14,900	1.313 (+.002/-.017)	1.516	.313	.438	.156
AN320-15	1-12	40,350	20,000	1.500 (+.002/-.019)	1.734	.375	.500	.156
AN320-18	1-1/8-12	50,900	25,250	1.688 (+.002/-.021)	1.953	.406	.563	.156
AN320-20	1-1/4-12	65,100	32,200	1.875 (+.002/-.023)	2.172	.469	.625	.156

253-848-9349
SpencerAircraft.com

Spencer Aircraft provides the information in this catalog for its customers as a ***reference only*** and it is not intended for design or guarantee of accuracy. Though it is our policy to ship all orders in a timely manner, Spencer Aircraft cannot guarantee that all items will be in stock at all times.

AN315

Plain - Hexagon - Airframe Nut

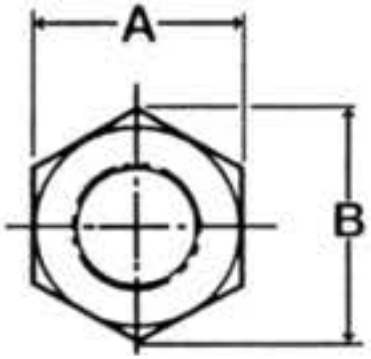

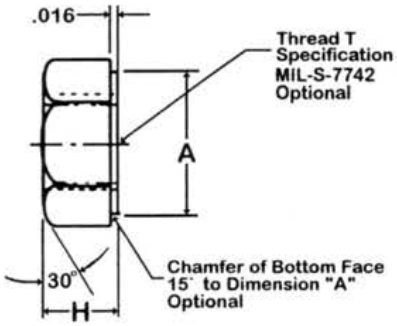

Tolerances on dimension “A” may conform to applicable material specification for bar and rod

Ultimate Tensile Strength
Minimum in Pounds

AN Part #	Thread (UNF-3B)	Steel	Alum. Alloy	A	B	H
AN315-640	6-40			.313 (+.002/-.010)	23/64	7/64
AN315-3	10-32	2,210	1,100	.375 (+.002/-.010)	7/16	9/64
AN315-4	1/4-28	4,080	2,030	.438 (+.002/-.010)	1/2	3/16
AN315-5	5/16-24	6,500	3,220	.500 (+.002/-.010)	37/64	15/64
AN315-6	3/8-24	10,100	5,020	.563 (+.002/-.010)	21/32	9/32
AN315-7	7/16-20	13,600	6,750	.625 (+.002/-.011)	23/32	21/64
AN315-8	1/2-20	18,500	9,180	.750 (+.002/-.012)	7/8	3/8
AN315-9	9/16-18	23,600	11,700	.875 (+.002/-.012)	1-1/64	27/64
AN315-10	5/8-18	30,100	14,900	1.000 (+.002/-.014)	1-5/32	15/32
AN315-12	3/4-16	44,000	21,800	1.125 (+.002/-.016)	1-19/64	5/8
AN315-14	7/8-14	60,000	29,800	1.313 (+.002/-.017)	1-33/64	21/32
AN315-15	1-12	80,700	40,000	1.500 (+.002/-.019)	1-47/64	3/6
AN315-18	1-1/8-12	101,800	50,500	1.688 (+.002/-.021)	1-61/64	13/16
AN315-20	1-1/4-12	130,200	64,400	1.875 (+.002/-.023)	2-11/64	7/8

Add (C) **before** dash number for Corrosion Resistant Steel nuts.
Add (D) **before** dash number for Aluminum Alloy nuts.
Use (A) for Aluminum Alloy nuts larger than -5 size
Add (R) **after** dash number for Right Hand thread.
Add (L) **after** dash number for Left Hand thread.

AN316

Hexagon Jam Nut

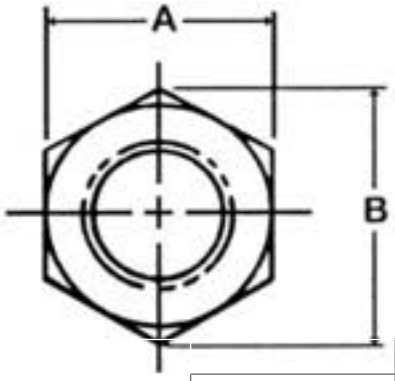

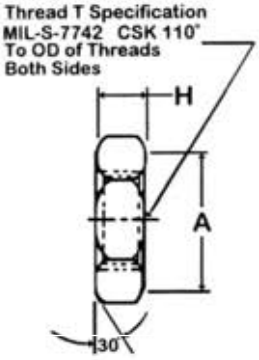

AN Part #	Thread (UNF-3B)	Ultimate Tensile Strength Minimum in Pounds	A	B	H
AN316-4	1/4-28	2,040	.438 (+.002/-.010)	1/2	1/8
AN316-5	5/16-24	3,250	.500 (+.002/-.010)	37/64	5/32
AN316-6	3/8-24	5,050	.563 (+.002/-.010)	21/32	3/16
AN316-7	7/16-20	6,800	.625 (+.002/-.011)	23/32	7/32
AN316-8	1/2-20	9,250	.750 (+.002/-.012)	7/8	1/4
AN316-9	9/16-18	11,800	.875 (+.002/-.012)	1-1/64	9/32
AN316-10	5/8-18	15,050	1.000 (+.002/-.014)	1-5/32	5/16
AN316-12	3/4-16	22,000	1.125 (+.002/-.016)	1-19/64	3/8
AN316-14	7/8-14	30,000	1.313 (+.002/-.017)	1-33/64	7/16
AN316-18 (a)	1-12	40,350	1.500 (+.002/-.019)	1-47/64	1/2

Add “C” **before** of dash number for corrosion-resistant steel nuts.
Add “R” **after** dash number for right-hand thread.
Add “L” **after** dash number for Left-hand thread.

Spencer Aircraft provides the information in this catalog for its customers as a ***reference only*** and it is not intended for design or guarantee of accuracy. Though it is our policy to ship all orders in a timely manner, Spencer Aircraft cannot guarantee that all items will be in stock at all times.

SELF-LOCKING NUTS

AN365-#A, MS20365-#A, MS21044N#, AN365C#A, MS20365C#A, MS21044C#

Nylon Insert - Full Profile

	Carbon Steel		
To Fit Diameter	AN365-	MS20365-	MS21044N
4-40	440A	440A	N04
6-32	632A	632A	N06
8-32	832A	832A	N08
10-32	1032A	1032A	N3
1/4-28	428A	428A	N4
5/16-24	524A	524A	N5
3/8-24	624A	624A	N6
7/16-20	720A	720A	N7
1/2-20	820A	820A	N8
9/16-18	918A	918A	N9
5/8-18	1018A	1018A	N10

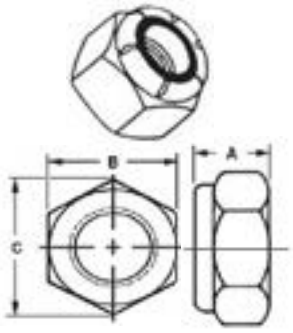

MAX. TEMP. 250°

	Stainless Steel		
To Fit Diameter	AN365C	MS20365C	MS21044C
4-40	C440A	C440A	C04
6-32	C632A	C632A	C06
8-32	C832A	C832A	C08
10-32	C1032A	C1032A	C3
1/4-28	C428A	C428A	C4
5/16-24	C524A	C524A	C5
3/8-24	C624A	C624A	C6
7/16-20	720A	720A	C7
1/2-20	C820A	C820A	C8
9/16-18	C918A	C918A	C9
5/8-18	C1018A	C1018A	C10

AN364-#A, MS20364-#A, MS21083N#, AN364C#A, MS20364C#A,MS21083C#

Nylon Insert - Low Profile

	Carbon Steel		
To Fit Diameter	AN364-	MS20364-	MS21083N
4-40	440A	440A	N04
6-32	632A	632A	N06
8-32	832A	832A	N08
10-32	1032A	1032A	N3
1/4-28	428A	428A	N4
5/16-24	524A	524A	N5
3/8-24	624A	624A	N6
7/16-20	720A	720A	N7
1/2-20	820A	820A	N8
9/16-18	918A	918A	N9
5/8-18	1018A	1018A	N10

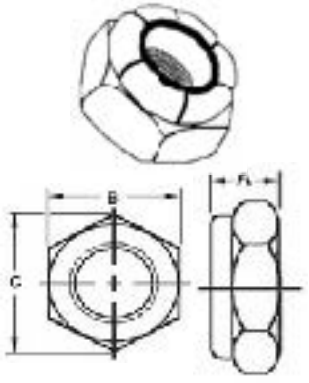

MAX. TEMP. 250°

	Stainless Steel		
To Fit Diameter	AN364C	MS20364C	MS21083C
4-40	C440A	C440A	C04
6-32	C632A	C632A	C06
8-32	C832A	C832A	C08
10-32	C1032A	C1032A	C3
1/4-28	C428A	C428A	C4
5/16-24	C524A	C524A	C5
3/8-24	C624A	C624A	C6
7/16-20	720A	720A	C7
1/2-20	C820A	C820A	C8
9/16-18	C918A	C918A	C9
5/8-18	C1018A	C1018A	C10

NOTE: Normally a nylon insert locknut. However, when a (C) appears at the end of a number sequence, it denotes an all metal locknut; in this case, low profile. This is an old style numbering system that has never been updated and is still called out in parts manuals for a lot of older aircrafts.

AN363-#, AN365-#C (MS20365-#C) AN363C#, MS21045-#, MS21046C#

All Metal - Full Profile

	Carbon Steel Cadmium Plated - Type II, Class II		
To Fit Diameter	AN363-	AN365-	MS21045-
4-40	440	440C	04
6-32	632	632C	06
8-32	832	832C	08
10-32	1032	1032C	3
1/4-28	428	428C	4
5/16-24	524	524C	5
3/8-24	624	624C	6
7/16-20			7*
1/2-20	820	820C	8
9/16-18	918	918C	9
5/8-18	1018	1018C	10

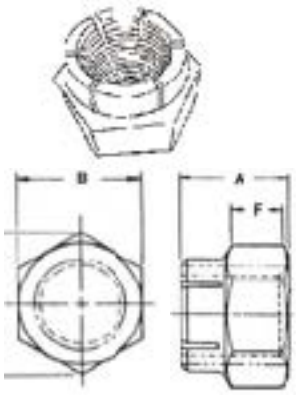

MAX. TEMP. 450°

	Stainless Steel Passivated Finish & Silver Plated	
To Fit Diameter	AN363C	MS21046C
4-40	C440	C04
6-32	C632	C06
8-32	C832	C08
10-32	C1032	C3
1/4-28	C428	C4
5/16-24	C524	C5
3/8-24	C624	C6

NOTE: Adding (C) to the end of AN365 nut number will denote an all metal locknut now called AN363. This is an old numbering style used before the all metal nut gained their own numbering series (i.e. AN363) and is still called out in parts manuals for a lot of older aircraft. The (C) on the ned of AN365 does not mean stainless, but rather all metal carbon steel. *AN365-720A, AN363-720 & AN364-720A are small pattern wrench pad. The MS Series are heavy duty wrench pad.

253-848-9349
SpencerAircraft.com

Spencer Aircraft provides the information in this catalog for its customers as a ***reference only*** and it is not intended for design or guarantee of accuracy. Though it is our policy to ship all orders in a timely manner, Spencer Aircraft cannot guarantee that all items will be in stock at all times.

SELF-LOCKING JET NUTS

MS21042-#, MS21042L#, NAS1291-#, NAS1291X#

MAX. TEMP. 450°

Reduced Dimension - All Metal

Alloy Steel

UNF3B **UNC3B**

Cadmium Plated - Type II, Class II

To Fit Diameter	MS21042-	NAS1291x
2-56	02	X02
4-40	04	X04
6-32	06	X06
8-32	08	X08
10-32	3	X3
1/4-28	4	X4
5/16-24	5	X5
3/8-24	6	X6
7/16-20		X7
1/2-20		X8

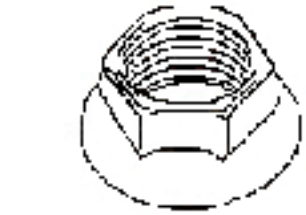

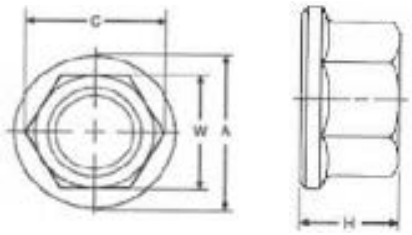

Alloy Steel

UNF3B **UNC3B**

Cadmium Plated - Type II, Class II - Dry Film Lube

To Fit Diameter	MS21042L	NAS1291-
2-56	L02	02
4-40	L04	04
6-32	L06	06
8-32	L08	08
10-32	L3	3
1/4-28	L4	4
5/16-24	L5	5
3/8-24	L6	6
7/16-20		7
1/2-20		8

MS21043-# & NAS1291C# (SUPERSEDES NAS679, NAS1021, NAS1022)

MAX. TEMP. 800°

Reduced Dimension - All Metal

Silver Plated Stainless

Stainless Steel & Silver Plated UNC3B

To Fit Diameter	MS21043-	NAS1291C
4-40	04	C04
6-32	06	C06
8-32	08	C08
10-32	3	C3
1/4-28	4	C4
5/16-24	5	C5
3/8-24	6	C6

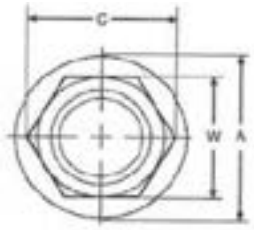



NAS679#, NAS679C#M & NAS679A#W

Low Height Hex

Max Temp: 450° Dry Film Coating
Max Temp: 800° Silver Plated

NOTE: Internal wrench feature available only on sizes 4-40 thru 1/4-28

Cadmium Plated - Type II, Class II

To Fit Diameter	Steel	Stainless Steel Dry Film Coating	Stainless Steel Silver Plated
4-40	A04	C04M	C04
6-32	A06	C06M	C06
8-32	A08	C08M	C08
10-32	A3	C3M	C3
1/4-28	A4	C4M	C4
5/16-24	A5	C5M	C5
3/8-24	A6	C6M	C6
7/16-20	A7	C7M	C7

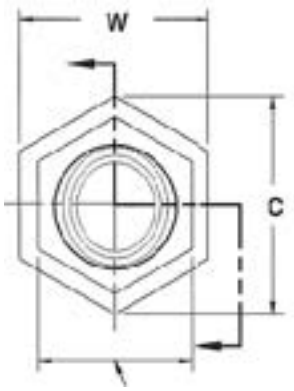



Spencer Aircraft provides the information in this catalog for its customers as a ***reference only*** and it is not intended for design or guarantee of accuracy. Though it is our policy to ship all orders in a timely manner, Spencer Aircraft cannot guarantee that all items will be in stock at all times.

Hex Nut - Brass - Tall

To Fit Diameter	NAF213790-	AC36A6203-
1/4-28	4	4
5/16-24	5	5

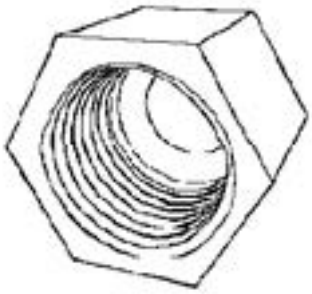

Engine Nuts - Steel, Cadmium II Plated

To Fit Diameter	AN360-
10-32	3
1/4-28	4
5/16-24	5
3/8-24	6
7/16-20	7
1/2-20	8

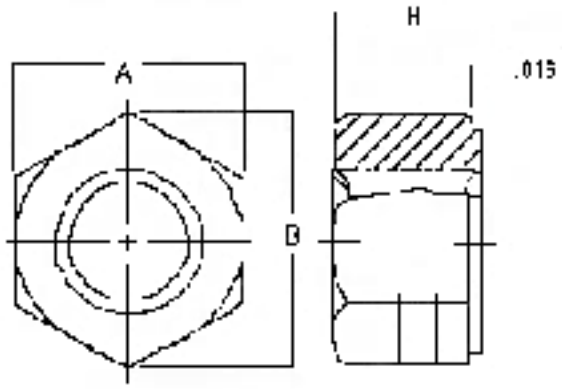

Hex Nut - Plain - Coarse Thread

To Fit Diameter	AN340-			MS35649-		
	Cadmium II Plated	Corrosion Resistant Steel	Brass	Cadmium II Plated	Corrosion Resistant Steel	Brass
2-56	2	C2	B2	222	224	226
4-40	4	C4	B4	242	244	246
6-32	6	C6	B6	262	264	266
8-32	8	C8	B8	282	284	287
10-32	10	C10	B10	202	204	206
1/4-28	416	C416	B416	2252	2254	2256
5/16-24	516	C516	B516	2312	2314	2316
3/8-24	616	C616	C616	2382	2384	2386

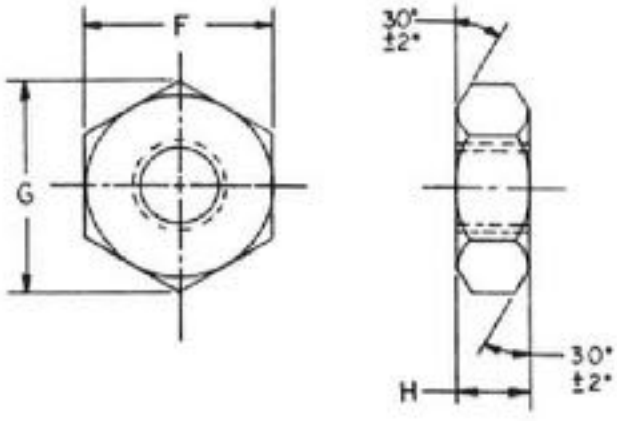

253-848-9349
SpencerAircraft.com

Spencer Aircraft provides the information in this catalog for its customers as a ***reference only*** and it is not intended for design or guarantee of accuracy. Though it is our policy to ship all orders in a timely manner, Spencer Aircraft cannot guarantee that all items will be in stock at all times.

NAS509

4130 Steel & A286 Stainless - both 150 KSI Material

Corner Drilled Jam Nuts

Corner Drilled Jam Nuts

Dash Number	Thread Size	Wrench Size	Height	Hole Size
06	6-32	5/16	.125	.035
08	8-32	11/32	.125	.035
3	10-32	3/8	.156	.035
4	1/4-28	7/16	.188	.046
5	5/16-24	1/2	.219	.046
6	3/8-24	9/16	.250	.046
7	7/16-20	5/8	.281	.046
8	1/2-20	3/4	.313	.046
9	9/16-18	7/8	.375	.046
10	5/8-18	15/16	.406	.046
12	3/4-16	1-1/16	.469	.070
14	7/8-14	1-1/4	.500	.070
17	1-12	1-1/2	.500	.070
18	1-1/8-12	1-5/8	.531	.070

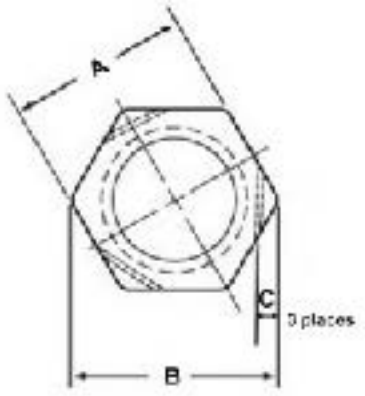

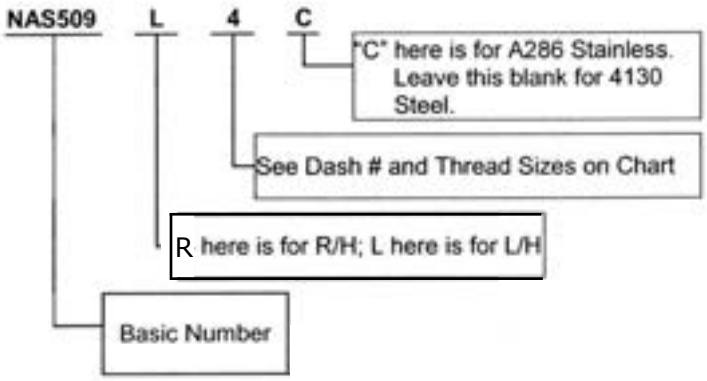

Stainless Nuts are Non-Plated & Steel Nuts are Cadmium II Plated

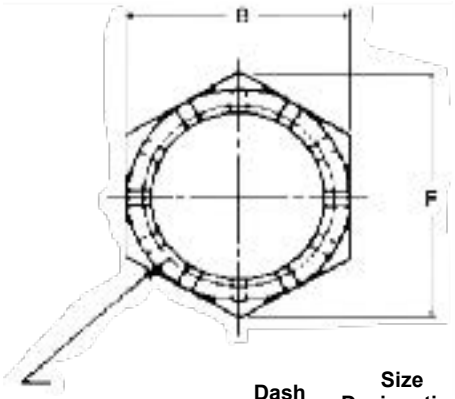

MS21025

Supersedes AN7502

Castellated-Hexagon Nut

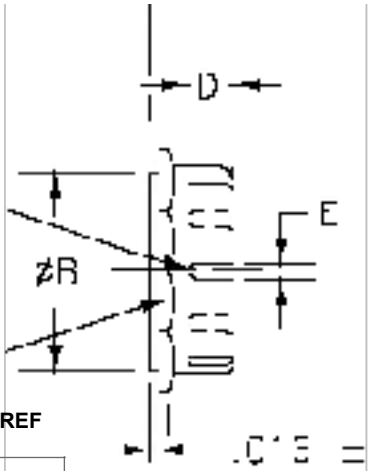

Castellated, Hexagon Nut

Thread T

Thread

Countersunk Opposite End

Only 110° to O.D. of Threads

Dash Number	Size Designation UN-3B	Pitch Diameter		B	C	D	E	F REF
-15	.9375-16	.8969	+.0049/-.0000	1.250	.531	.219	.156	1.448
-16	1.0000-16	.9594	+.0049/-.0000		.500	.250		
-20	1.2500-16	1.2094	+.0050/-.0000	1.500	.562			1.732
-23	1.4375-16	1.3969	+.0051/-.0000	1.688		.312		1.948
-24	1.5000-16	1.4594	+.0051/-.0000	1.750				2.021
-28	1.7500-16	1.7094	+.0052/-.0000	2.125			.172	2.454
-31	1.9375-16	1.8969	+.0052/-.0000	2.250	.594			2.596
-32	2.0000-16	1.9594	+.0052/-.0000	2.250	.656			2.596
-38	2.4375-16	2.3969	+.0054/-.0000	2.875	.812	.406	.203	3.319
-47	2.9375-16	2.8969	+.0054/-.0000	3.500		.375		4.060
-56	3.4375-16	3.3969	+.0056/-.0000	4.000	1.000	.438		4.619
-71	4.4375-16	4.3969	+.0059/-.0000	5.000	1.500	.625		5.774

Spencer Aircraft provides the information in this catalog for its customers as a ***reference only*** and it is not intended for design or guarantee of accuracy. Though it is our policy to ship all orders in a timely manner, Spencer Aircraft cannot guarantee that all items will be in stock at all times.

NUT PLATES

Visual Identification Chart

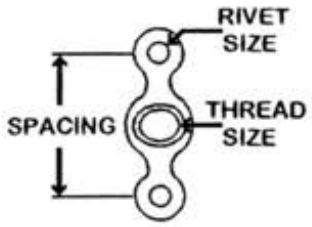

MS21047, Steel, Fixed
MS21048, Cres., Fixed

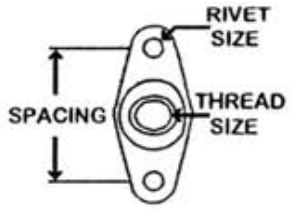

MS21049, Steel, Fixed, Countersunk
MS21050, Cres., Fixed, Countersunk

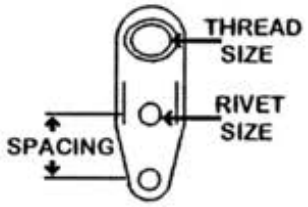

MS21051, Steel, Fixed, Standard Spacing, One Leg
MS21052, Cres., Fixed, Standard Spacing, One Leg

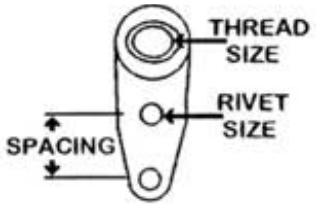

MS21053, Steel, Floating, Standard Spacing, One Leg
MS21062, Cres., Floating, Standard Spacing, One Leg

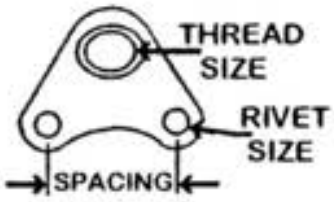

MS21055, Steel, Fixed, Std Spacing, Corner
MS21056, Cres., Fixed, Std Spacing, Corner
MS21057, Steel, Fixed, Countersunk, Corner
MS21058, Cres., Fixed, Countersunk, Corner
MS21073, Steel Fixed, Mini Pattern, Corner
MS21074, Cres., Fixed, Mini Pattern, Corner

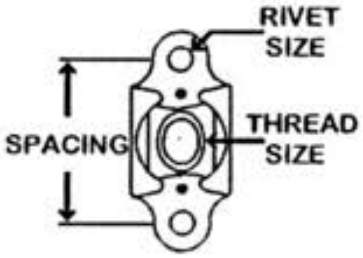

MS21059, Steel
MS21060, Cres.
Floating Type, Standard Spacing

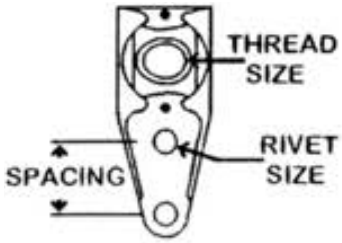

MS21061, Steel, Floating, Standard Spacing, One Leg
MS21062, Cres., Floating, Standard Spacing, One Leg

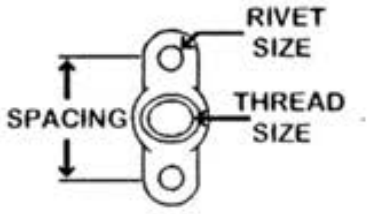

MS21069, Steel Miniature
MS21070, Cres., Miniature

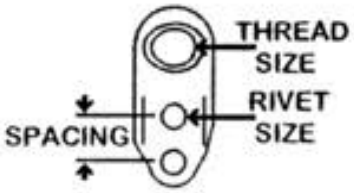

MS21071, Steel, Mini, One Leg
MS21072, Cres., Mini, One Leg

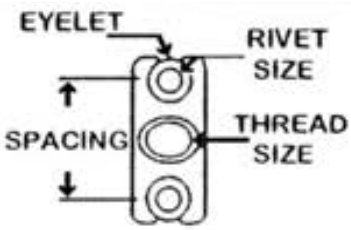

MS21075-(XX)E, Steel Mini Floater, Eyelets
MS21076-(XX)E, Cres, Mini Floater, Eyelets

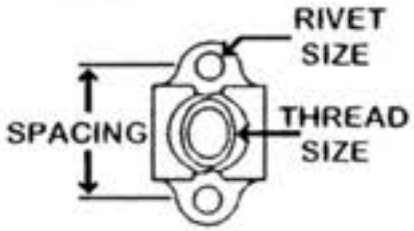

MS21075-(XX)N, Steel, Mini Floater, No Eyelets
MS21076-(XX)N, Cres., Mini Floater, No Eyelets

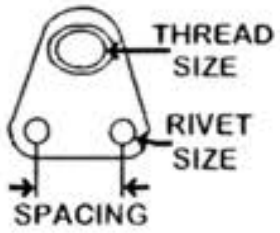

MS21086, Steel Side by Side Pattern
MS21087, Cres., Side by Side Pattern

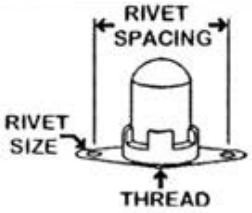

NAS1473, Self Sealing, Standard Spacing

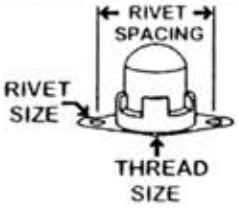

NAS1474, Self Sealing, Mini Pattern

253-848-9349
SpencerAircraft.com

Spencer Aircraft provides the information in this catalog for its customers as a ***reference only*** and it is not intended for design or guarantee of accuracy. Though it is our policy to ship all orders in a timely manner, Spencer Aircraft cannot guarantee that all items will be in stock at all times.

NUT PLATES SELECTION CHART

Part Number	Supersedures / Notes	Spacing Chart	Pattern	Material	Plating	Max. Temp.	Rated Tensile
MS21047(XX)	NAS680A, NAS1023A	A	Standard, Fixed	Steel	CAD II/ Black Moly	450	125 KSI
MS21048(XX)	NAS680C, NAS1023C		Standard, Fixed	Cres.	Silver	800	
MS21049(XX)	NAS681A		Std, Fixed, C/S	Steel	CAD II/ Black Moly	450	
MS21050(XX)	NAS681C		Std, Fixed, C/S	Cres.	Silver	800	
MS21051(XX)	NAS682A, NAS1025A	C	Std, Fixed, 1 Leg	Steel	CAD II/ Black Moly	450	
MS21052(XX)	NAS682C, NAS1025C		Std, Fixed, 1 Leg	Cres.	Silver	800	
MS21053(XX)	NAS683A		Fixed, C/S 1 Leg	Steel	CAD II/ Black Moly	450	
MS21054(XX)	NAS683C		Fixed, C/S 1 Leg	Cres.	Silver	800	
MS21055(XX)	NAS684A, NAS1027A	D	Std, Fixed, Corner	Steel	CAD II/ Black Moly	450	
MS21056(XX)	NAS684C, NAS1027C		Std, Fixed, Corner	Cres.	Silver	800	
MS21057(XX)	NAS685A		Fixed, Corner, C/S	Steel	CAD II/ Black Moly	450	
MS21058(XX)	NAS685C		Fixed, Corner, C/S	Cres.	Silver	800	
MS21059(XX)	NAS686A, NAS1031A	A	Standard, Floater	Steel	CAD II/ Black Moly	450	
MS21060(XX)	NAS686C, NAS1031C		Standard, Floater	Cres.	Silver	800	
MS21061(XX)	NAS687A, NAS1032A	C	Std, Floater, 1 Leg	Steel	CAD II/ Black Moly	450	
MS21062(XX)	NAS687C, NAS1032C		Std, Floater, 1 Leg	Cres.	Silver	800	
MS21069(XX)	NAS697A	B	Fixed, Mini	Steel	CAD II/ Black Moly	450	
MS21070(XX)	NAS697C		Fixed, Mini	Cres.	Silver	800	
MS21071(XX)	NAS696A	E	Fixed, Mini, 1 Leg	Steel	CAD II/ Black Moly	450	
MS21072(XX)	NAS696C		Fixed, Mini, 1 Leg	Cres.	Silver	800	
MS21073(XX)	NAS698A	F	Fixed, Mini, Corner	Steel	CAD II/ Black Moly	450	
MS21074(XX)	NAS698C		Fixed, Mini, Corner	Cres.	Silver	800	
MS21075(XX)	NAS1068A	B	Mini, Floater	Steel	CAD II/ Black Moly	450	
MS21076(XX)	NAS1068C		Mini, Floater	Cres.	Silver	800	
MS21086(XX)	NAS1067A	G	Side by Side	Steel	CAD II/ Black Moly	450	
MS21087(XX)	NAS1067C		Side by Side	Cres.	Silver	800	
NAS1473A(XX)	Available in 8-32 thru 5/16-24	A	Std, Self Sealing	Steel	Cadmium II	225	
NAS1474A(XX)	Available in 4-40 thru 1/4-20	H	Mini, Self Sealing	Steel	Cadmium II	225	

Spacing Chart-Size Chart-Part Number Examples

Rivet Spacing Chart "A"

Nut Threads Diameter - Pitch	Rivet Spacing
4-40 thru 10-32	.688
1/4-28 thru 3/8-24	1.00

Rivet Spacing Chart "B"

Nut Threads Diameter - Pitch	Rivet Spacing
4-40	.406
6-32	.437
8-32	.469
10-32	.500
1/4-28	.562
5/16-24	.718
3/8-24	.828

Rivet Spacing Chart "C"

Nut Threads Diameter - Pitch	Rivet Spacing
4-40 thru 3/8-24	.312

Rivet Spacing Chart "D"

Nut Threads Diameter - Pitch	Rivet Spacing
4-40 thru 10-32	.486
1/4-28 thru 3/8-24	.707

Rivet Spacing Chart "E"

Nut Threads Diameter - Pitch	Rivet Spacing
4-40 thru 10-32	.219
1/4-28 thru 3/8-24	.269

Rivet Spacing Chart "F"

Nut Threads Diameter - Pitch	Rivet Spacing
4-40	.287
6-32	.308
8-32	.331
10-32	.354
1/4-28	.398
5/16-24	.508
3/8-24	.585

Rivet Spacing Chart "G"

Nut Threads Diameter - Pitch	Rivet Spacing
8-32 thru 1/4-28	.219
5/16 thru 3/8-24	1.00

Rivet Spacing Chart "H"

Nut Threads Diameter - Pitch	Rivet Spacing
4-40 thru 10-32	.590
1/4-28	.752

Thread Sizes (XX)

Dash Number	Dia / Pitch
04	4-40
06	6-32
08	8-32
3	10-32
4	1/4-28
5	5/16-24
6	3/8-24

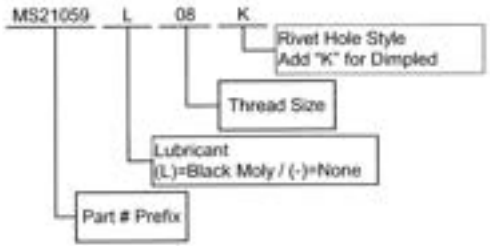

Dimpled rivet holes are NOT available for the following part numbers:
MS21075, MS21076, NAS1033, NAS1473, NAS1474

Rivet size is 3/32 for nut plates sized 4-40 thru 1/4-28
Rivet size is 1/8 for nut plates sized 5/16-24 & 3/8-24

If Black Moly is used with Cres. nut plates, the maximum temperature 450° F

Spencer Aircraft provides the information in this catalog for its customers as a ***reference only*** and it is not intended for design or guarantee of accuracy. Though it is our policy to ship all orders in a timely manner, Spencer Aircraft cannot guarantee that all items will be in stock at all times.

SELF-LOCKING NUT PLATES

MS21047 / NAS680A

Two Lug, Low Height, Self-Locking

UNJF3B UNJC3B

Carbon Steel, L = Dry Film Lubricant - 450°

Screw Diameter	MS21047L	NAS680A	MS21047L K Countersunk	Length	Width MAX.	Width MIN.
4-40	L04	A04	L04K	.984	.260	.195
6-32	L06	A06	L06K		.265	.239
8-32	L08	A08	L08K		.297	.277
10-32	L3	A3	L3K		.328	.308
1/4-28	L4	A4	L4K	1.260	.414	.375
5/16-24	L5	A5	L5K	1.292	.505	.485



MS21048L / NAS680C

Two Lug, Low Height, Self-Locking

UNJF3B UNJC3B

Stainless Steel, Passivated Finish, L = Dry Film Lubricant

Screw Diameter	MS21048 800°	MS21048L 450°	NAS680C	MS21048 - 800° Countersunk	MS21048L - 450° Countersunk	Length	Width MAX.	Width MIN.
4-40	04	L04	C04	04K	L04K	.948	.260	.195
6-32	06	L06	C06	06K	L06K		.265	.239
8-32	08	L08	C08	08K	L08K		.297	.277
10-32	3	L3	C3	3K	L3		.320	.308
1/4-28	4	L4	C4	4K	L4K	1.260	.414	.375
5/16-24	5	L5	C5	5K	L5K	1.292	.505	.405



MS21049L / NAS681A

Two Lug, Low Height, Self-Locking, 100° Countersunk

UNJF3B UNJC3B

Alloy Steel, Cadmium II Plating, L = Dry Film Lubricant - 450°

Screw Diameter	MS21049	MS21049L	NAS681A	MS21049L K Countersunk	Length	Width MAX.	Width MIN.
6-32	06	L06	A06		.948		
8-32	08	L08	A08	L08K		.422	.360
10-32	3	L3	A3	L3K		.453	.406
1/4-28	4	L4	A4	L4K	1.260	.619	.535
5/16-24	5	L5	A5	L5K	1.292	.766	.681





MS21051L / NAS682A

One Lug, Low Height, Self-Locking

UNJF3B UNJC3B

Alloy Steel, Cadmium II Plating, Dry Film Lubricant - 450°

Screw Diameter	MS21051L	NAS682A	Length	Width MAX.	Width MIN.
6-32	L06	A06	.935	.297	.239
8-32	L08	A08			.277
10-32	L3	A3	.950	.328	.308
1/4-28	L4	A4	.993	.414	.375
5/16-24	L5	A5	1.210	.505	.485
3/8-24	L6	A6	1.264	.614	.594
7/16-20	L7	A7	1.446	.726	.697



MS21053

One Lug, Low Height, 100° Countersunk

UNJF3B UNJC3B

Alloy Steel, Cadmium II Plating, L = Dry Film Lubricant - 450°

Screw Diameter	MS21053	MS21053L	MS21053L K Countersunk	Length	Width MAX.	Width MIN.
8-32	08	L08	L08K	.997	.422	.360
10-32	3	L3	L3K	1.013	.453	.406
1/4-28	4	L4	L4K	1.252	.619	.535
5/16-24	5	L5	L5K	1.340	.766	.681

Spencer Aircraft provides the information in this catalog for its customers as a ***reference only*** and it is not intended for design or guarantee of accuracy. Though it is our policy to ship all orders in a timely manner, Spencer Aircraft cannot guarantee that all items will be in stock at all times.

SELF-LOCKING NUT PLATES



MS21055L / NAS684A

Corner Lug, Low Height, Self-Locking

UNJF3B UNJC3B

Alloy Steel, Cadmium II Plating, L = Dry Film Lubricant - 450°

Screw Diameter	MS21055	MS21055L	NAS684A	MS21055L K Countersunk	Length	Width MAX.	Width MIN.
4-40	04	L04	A04	L04K	.637	.120	.105
6-32	06	L06	A06	L06K		.133	.108
8-32	08	L08	A08	L08K		.149	.125
10-32	3	L3	A3	L3K	.653	.164	.145
1/4-28	4	L4	A4	L4K	.852	.207	.185
5/16-24	5	L5	A5	L5K	.914	.248	.216



MS21069L / NAS697A

Two Lug, Low Height, Self-Locking, Reduced Rivet Spacing

UNJF3B UNJC3B

Alloy Steel, Cadmium II Plating, L = Dry Film Lubricant - 450°

Screw Diameter	MS21069	MS21069L	MS21069L K Countersunk	Length	Width MAX.	Width MIN.
4-40	04	L04	L04K	.630	.260	.140
6-32	06	L06	L06K	.661	.285	.195
8-32	08	L08	L08K	.692	.297	.230
10-32	3	L3	L3K	.724	.328	.298
1/4-28	4	L4	L4K	.786	.414	.380
5/16-24	L5	L5	L5K	1.006	.505	.475



MS21071L / NAS696A

One Lug, Low Height, Self-Locking, Reduced Rivet Spacing

UNJF3B UNJC3B

Alloy Steel, Cadmium II Plating, L = Dry Film Lubricant - 450°

Screw Diameter	MS21071L	NAS696A	MS21071L K Countersunk	Length	Width MAX.	Width MIN.
4-40	L04	A04	L04K	.667	.260	.140
6-32	L06	A06	L06K	.684	.265	.195
8-32	L08	A08	L08K	.715	.297	.235
10-32	L3	A3	L3K	.745	.328	.298
1/4-28	L4	A4	L4K	.822	.414	.380
5/16-24	L5	A5	L5K	1.026	.505	.475



MS21078 / AN366F

Two Lug, Self-Locking, Non-Metallic Insert

UNJF3B UNJC3B

Carbon Steel, Cadmium II Plating - 250°

Screw Diameter	MS21078	AN366F	MS21078 K Countersunk	Length	Width MAX.	Width MIN.
4-40	04	440A	04K	.984	.406	.375
6-32	06	632A	06K			
8-32	08	832A	08K			
10-32	3	1032A	3K			
1/4-28	4	428A	4K	1.296	.518	.484
5/16-24	5	524A	5K		.531	.500
3/8-24	6	624A	6K		.641	.609



MS21080

One Lug, Self-Locking, Non-Metallic Insert

UNJF3B UNJC3B

Carbon Steel, Cadmium II Plating - 250°

Screw Diameter	MS21080-	Length	Width MAX.	Width MIN.
6-32	06	1.031	.406	.375
8-32	08			
10-32	3			
1/4-28	4	1.062	.516	.438
5/16-24	5	1.250	.531	.500
3/8-24	6	1.344	.641	.609



MS21081

Corner Lug, Self-Locking, Non-Metallic Insert

UNJF3B UNJC3B

Carbon Steel, Cadmium II Plating - 250°

Screw Diameter	MS21081	MS21081 Countersunk	Length	Width MAX.	Width MIN.
4-40	04	04K	.650	.344	.314
6-32	06	06K	.703	.406	.375
8-32	08	08K			
10-32	3	3K			
1/4-28	4	4K	.906	.514	.484
5/16-24	5	5K	.937	.582	.500
3/8-24	6	6K	1.008	.718	.609

Spencer Aircraft provides the information in this catalog for its customers as a ***reference only*** and it is not intended for design or guarantee of accuracy. Though it is our policy to ship all orders in a timely manner, Spencer Aircraft cannot guarantee that all items will be in stock at all times.

Corner Lug - Low Height - Reduced Dimension
MS21073L#, NAS696A#
Alloy Steel
UNJF3B UNJC3B
Cadmium II Plating - Type 2 - Class 3
Dry Film Lubricant

Diameter	MS21073L	NAS696A
4-40	L04	A04
6-32	L06	A06
8-32	L08	A08
10-32	L3	A3
1/4-28	L4	A4
5/16-24	L5	A5



Two Lug - Low Height
MS21059L#, NAS686A#
Alloy Steel
UNJF3B UNJC3B
Cadmium II Plating - Type 2 - Class 3
Dry Film Lubricant

Diameter	MS21059L	NAS686A
4-40	L04	A04
6-32	L06	A06
8-32	L08	A08
10-32	L3	A3
1/4-28	L4	A4
5/16-24	L5	A5



Two Lug - Low Height - Countersunk Holes
MS21059L#K, NAS686A#K
Alloy Steel
UNJF3B UNJC3B
Cadmium II Plating - Type 2 - Class 3
Dry Film Lubricant

Diameter	MS21059L	NAS686A
4-40	L04K	A04K
6-32	L06K	A06K
8-32	L08K	A08K
10-32	L3K	A3K
1/4-28	L4K	A4K
5/16-24	L5K	A5K

One Lug - Low Height
MS21061L#, NAS687Z#
Alloy Steel
UNJF3B UNJC3B
Cadmium II Plating - Type 2 - Class 3
Dry Film Lubricant

Diameter	MS21061L	NAS687
4-40	L04	A04
6-32	L06	A06
8-32	L08	A08
10-32	L3	A3
1/4-28	L4	A4
5/16-24	L5	A5



One Lug - Low Height - Countersunk Holes
MS21061L#K, NAS687A#K
Alloy Steel
UNJF3B UNJC3B
Cadmium II Plating - Type 2 - Class 3
Dry Film Lubricant

Diameter	MS21061	NAS687
4-40	L04K	A04K
6-32	L06K	A06K
8-32	L08K	A08K
10-32	L3K	A3K
1/4-28	L4K	A4K
5/16-24	L5K	A5K

Two Lug - Floating Capped
MIL-R-6855 Seal
NAS1473A#
Steel Nut & Shell - Aluminum Or Steel Washer
UNJF3B UNJC3B
Cadmium II Plating - Type 2 - Class 3
Dry Film Lubricant

Diameter	NAS1473A
8-32	A08
10-32	A3
1/4-28	A4
5/16-24	A5

Sealing



Two Lug - Floating Capped
MIL-R-6855 Seal
NAS1474A#
Alloy Steel
UNJF3B UNJC3B
Cadmium II Plating - Type 2 - Class 3
Dry Film Lubricant

Diameter	NAS1474A
4-40	A04
6-32	A06
8-32	A08
10-32	A3
1/4-28	A4

Spencer Aircraft provides the information in this catalog for its customers as a ***reference only*** and it is not intended for design or guarantee of accuracy. Though it is our policy to ship all orders in a timely manner, Spencer Aircraft cannot guarantee that all items will be in stock at all times.

MS33737

Conversion Chart & Dimensions

Nut-Sheet Spring-Instrument Mounting

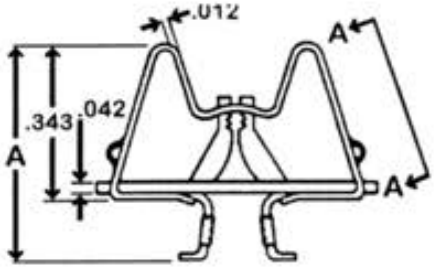



MS33737-(xx)	Tinnerman Number	Old NAS Number	"A"	"B"
MS33737-9C	A8938-632-493	NAS487-13	.438	.062
MS33737-10C	A8939-632-24J	NAS487-14	.469	.093
MS33737-11C	A6938-632-24J	NAS487-15	.500	.125
MS33737-12C	A8940-632-24J	NAS487-16	.562	.187
MS33737-13C	A8941-632-24J	NAS487-17	.625	.250
MS33737-14C	A8942-632-24J	NAS487-18	.688	.312
MS33737-15C	A8943-632-24J	NAS487-20	.750	.375
MS33737-16C	A8944-632-24J	NAS487-21	.750	.375+

RM52LHA4972

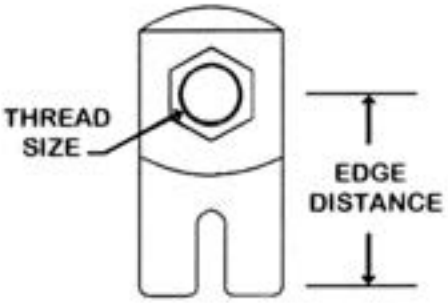

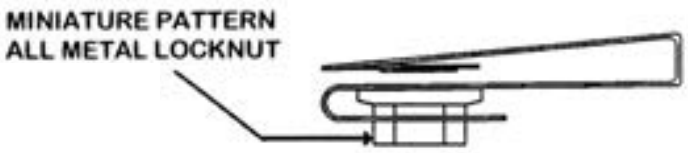

Nut Clips Selection Chart

Thread Size	Nominal Edge Distance	Approximate Panel Thickness	Esna RM52LH #	Manadnock #	Shurelock #
6-32	.281	.030-.062	A4972-5-62	294667	
6-32	.500	.020-.160			SL213-06-1
8-32	.250	.020-.120	A4972-4A-82	13080000-1	SL210-08-2
8-32	.281	.020-.120	A4972-5A-82	13080000-2	
8-32	.375	.020-.120	A4972-6-82	130008	SL211-08-1
8-32	.500	.020-.120	A4972-8-82	130007	SL213-08-1
8-32	.625	.020-.120	A4972-10-82	13080000-5	SL215-08-1
10-32	.250	.020-.120	A4972-4-73	13100000-1	SL210-3-2
10-32	.281	.020-.120	A4972-5-3	13100000-2	
10-32	.375	.020-.090	A4972-6-02	130069	SL211-3-1
10-32	.500	.020-.120	A4972-8-02	13100000-4	SL213-3-1
10-32	.625	.020-.120	A4972-10-02	130062	SL215-3-1
10-32	.705	.140-.250	A4972-11-02	130068	

Spencer Aircraft provides the information in this catalog for its customers as a ***reference only*** and it is not intended for design or guarantee of accuracy. Though it is our policy to ship all orders in a timely manner, Spencer Aircraft cannot guarantee that all items will be in stock at all times.

CLIP NUTS

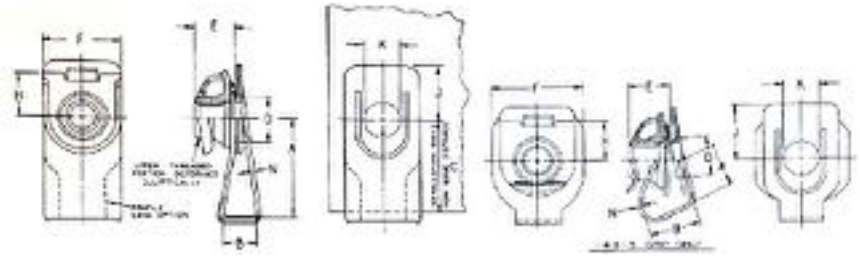

Esna Part #	Optional Reduced Esna Part #	Thread	A ±.010	B ±.015	C Nominal Edge Distance	D Max	E Max	F Max	H Max	J Max	K Min	N Max	Installation Hole Diameter (See Float Note)	Mounting Sheet Thickness	Approx Weight LB/100
RM52LHA4972-5-62	A4972-5-62	6-32	0.300	0.090	0.281	0.162	0.155	0.280	0.183	0.223	0.141	0.018	.163 - .173	.030 - .062	0.210
RM52LHA4972-4A-82	A4972-4A-82		0.265	0.180	0.250	0.210		0.500					.211 - .221	.020 - .160	0.390
RM52LHA4972-5A-82	A4972-5A-82		0.300	0.130	0.281									.020 - .120	
RM52LHA4972-6-82	A4972-6-82	8-32	0.395	0.155	0.375		0.202		0.225	0.285	0.170	0.023			0.370
RM52LHA4972-8-82	A4972-8-82		0.520	0.190	0.500	0.191		0.406					.192 - .202	.020 - .160	0.460
RM52LHA4972-10-82	A4972-10-82		0.665		0.625										0.510
RM52LHA4972-4-3	A4972-4-3		0.265	0.180	0.250			0.500						.020 - .120	0.410
RM52LHA4972-5-3	A4972-5-3		0.300	0.130	0.281										
RM52LHA4972-6-02	A4972-6-02	10-32	0.395	0.105	0.375	0.218	0.202		0.225	0.285	0.193	0.023	.220 - .230	.020 - .090	0.350
RM52LHA4972-8-02	A4972-8-02		0.520	0.190	0.500			0.406						.020 - .160	0.470
RM52LHA4972-10-02	A4972-10-02		0.665		0.625										0.520
RM52LHA4972-4-124	A4972-4-124	12-24	0.265	0.234	0.250	0.263	0.229	0.500			0.219	0.020	.264 - .274	.050 - .210	0.450

*The -4-82, -4-02 and -5-02 sizes have been superseded by -4A-82, -4-3 and -5-3 respectively, to effect a change to a more practical mounting sheet thickness range.

Material: Nut and Clip - Steel, Heat Treated

Finish: Nut - Cadmium Plate, QQ-P-416, Type I, Class 3, Molybdenum Disulphide Type Dry Film Lubricant

Clip: Cadmium Plate, QQ-P-416, Type II, Class 3.

Threads: MIL-S-7742 OR MIL-S-8879 (prior to addition of dry film lubricant)

Performance: MIL-N-25027 up to 450°F Temperature. Because design is not riveted for attachment, exception must be made to requirements for push out performance.

Float: When installed in the recommended installation hole, the clip will float approximately .011. Additional radial float can be obtained by using larger hole sizes. These parts are designed for a maximum installation hole diameter .032 over the maximum recommended values.

Application: Type LHA4972 clip nuts feature simplicity of installation and removal as anchor nuts in secondary structural applications where bolt holes are positioned reasonably close to sheet edge areas. The usual costs involved for attachments via riveting or welding are eliminated. The following series of illustrations graphically demonstrate the ease of nut installation and removal provided by this design.

Note: All parts except for size 6-32 have an effective thread relief of 062

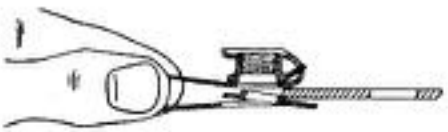

1. Holding nut in your fingers, force the clip against the work thus separating the edges of the clip.



3. A light press with finger slides clip over sheet surface allowing locating eyelet to engage the hole (with an audible snap).



2. Press down and push forward till locating eyelet clears lead edge of work and clip is fully opened over sheet.



4. Removal of the LHA4972 Clip-On is simple and easy. Place a thin screwdriver or knife blade between the work and the bottom clip. Turning the blade opens the clip, releasing the eyelet from the hole. Clip-on is then free and can be pulled off.

Spencer Aircraft provides the information in this catalog for its customers as a ***reference only*** and it is not intended for design or guarantee of accuracy. Though it is our policy to ship all orders in a timely manner, Spencer Aircraft cannot guarantee that all items will be in stock at all times.

TINNERMAN NUTS

"U" Type
for Type "B" Sheet Metal Screws
Spring Steel Heat Treated Olive Drab Color

Part Number	Screw Size	NAS Number	"A" Length	"B" Width	"C" Throat	Panel Thickness
A6187-4Z-1D	4	395-1	.380	.310	.187	.025-.032
A1784-6Z-1D	6	395-6	.610	.440	.281	.025-.051
A1785-6Z-1D	6	395-7	.840	.440	.500	.025-.064
A1789-8Z-1D	8	395-16	.610	.440	.281	.025-.051
A1787-8Z-1D	8	395-18	.840	.440	.500	.025-.064
A1758-10Z-1D	10	395-24	.620	.440	.281	.081-.094
A1787-10Z-1D	10		.840	.440	.500	.025-.064
A1274-8Z-1D	8	395-14	.500	.500	.250	.025-.032
A1348-8Z-1D	8	395-17	.730	.440	.343	.026-.064
A1788-8Z-1D	8		.840	.500	.500	.025-.064
A6052-6Z-1D	6	395-3	.450	.500	.218	.032-.040
A1932-6Z-1D	6	396-1	.580	.500	.265	.032-.051
A6052-8Z-1D	8	395-11	.450	.500	.218	.032-.040
A1786-8Z-1D	8	395-12	.530	.500	.218	.040-.051
A1932-8Z-1D	8	396-4	.580	.500	.265	.032-.051

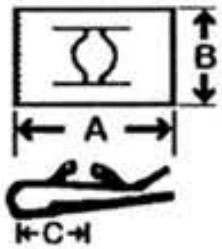

Flat Type
for Type "B" Sheet Metal Screws
Spring Steel Heat Treated Olive Drab Color

Part Number	Screw Size	NAS Number	"A" Length	"B" Width
A1776-4Z-1D	4	446-1	.500	.310
A1181-6Z-1D	6	446-2	.510	.310
A1777-6Z-1D	6		.630	.440
A1778-8Z-1D	8	446-4	.630	.440
A1779-10Z-1D	10	446-5	.880	.500

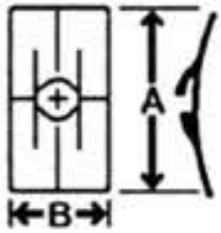

Anchor Type, One Leg
for Type "B" Sheet Metal Screws
Spring Steel Heat Treated Olive Drab Color

Part Number	Screw Size
A6194-6Z-1D	6
A6194-8Z-1D	8
S6194-10Z-1D	10



Anchor Type, One Leg
Countersunk Mounting Holes
for Type "B" Sheet Metal Screws
Spring Steel Heat Treated Olive Drab Color

Part Number	Screw Size
A6196-6Z-1D	6
A6196-8Z-1D	8
A6196-10Z-1D	10



Anchor Type, Two Leg
for Type "B" Sheet Metal Screws
Spring Steel Heat Treated Olive Drab Color

Part Number	Screw Size
A6191-4Z-1D	4
A6191-6Z-1D	6
A6191-8Z-1D	8
A6191-10Z-1D	10
A6162-8Z-1D (NAS444-14, S3429-2A)	8



Anchor Type, Two Leg
Countersunk Mounting Holes
for Type "B" Sheet Metal Screws
Spring Steel Heat Treated Olive Drab Color

Part Number	Screw Size
A6195-4Z-1D	4
A6195-6Z-1D	6
A6195-8Z-1D	8
A6195-10Z-1D	10



Spencer Aircraft provides the information in this catalog for its customers as a ***reference only*** and it is not intended for design or guarantee of accuracy. Though it is our policy to ship all orders in a timely manner, Spencer Aircraft cannot guarantee that all items will be in stock at all times.

RIVET NUTS

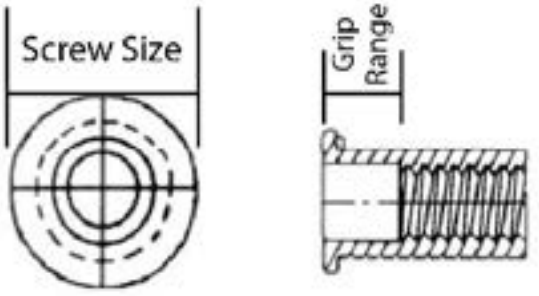

Key Lock Flat Head Rivet Nut

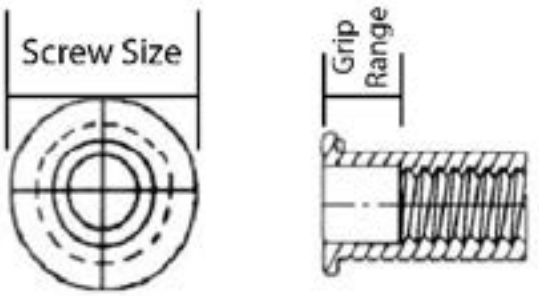

Countersunk Head Rivet Nut
Add “K” in place of - (dash) for Keyed Type

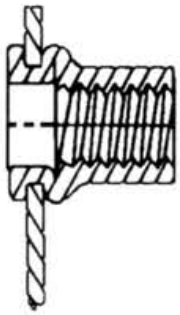

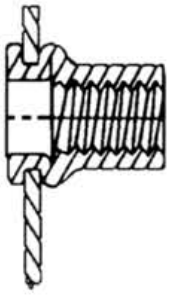

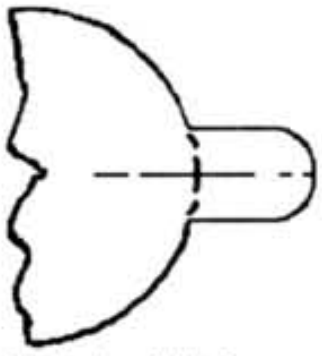

Notched Hole Required for Key Lock Type

Flat Head Rivet Nut

Screw Size	Grip Range	Part Number
6	.010-.075	A6-75
6	.075-.120	A6-120
6	.120-.160	A6-160
8	.010-.075	A8-75
8	.075-.120	A8-120
8	.120-.160	A8-160
10	.010-.080	A10-80
10	.080-.130	A10-130
6	.010-.075	A6K-75
6	.075-.120	A6K-120
6	.120-.160	A6K-160
8	.010-.075	A8K-75
8	.075-.120	A8K-120
8	.120-.160	A8K-160
10	.010-.080	A10K-80
10	.080-.130	A10K-130
10	.130-.180	A10K-180

Countersunk Head Rivet Nut

Screw Size	Grip Range	Part Number
6	.065-.106	A6-106
6	.106-.161	A6-161
6	.161-.201	A6-201
8	.065-.106	A8-106
8	.106-.161	A8-161
8	.161-.201	A8-201
10	.065-.116	A10-116
10	.116-.166	A10-166
6	.065-.106	A6K-106
6	.106-.161	A6K-161
6	.161-.201	A6K-201
8	.065-.106	A8K-106
8	.106-.161	A8K-161
8	.161-.201	A8K-201
10	.065-.116	A10K-116
10	.116-.166	A10K-166
10	.166-.216	A10K-216

NAS Rivet Nut

Thread	Grip Range	Length	Part Number
6-32	.010-.075	.438	NAS1329A06K75
6-32	.010-.075	.438	NAS1329A06-75
6-32	.075-.120	.500	NAS1329A06K120
6-32	.075-.120	.500	NAS1329A06-120
8-32	.010-.075	.438	NAS1329A08K75
8-32	.010-.075	.438	NAS1329A08-75
8-32	.075-.120	.500	NAS1329A08K120
8-32	.075-.120	.500	NAS1329A08-120
10-32	.010-.075	.438	NAS1329A3K80
10-32	.010-.075	.438	NAS1329A3-80
10-32	.075-.140	.500	AEA10K140
10-32	.075-.140	.500	AEA10-140

Spencer Aircraft provides the information in this catalog for its customers as a ***reference only*** and it is not intended for design or guarantee of accuracy. Though it is our policy to ship all orders in a timely manner, Spencer Aircraft cannot guarantee that all items will be in stock at all times.

AN970

Flat Washer

Supersedes MS63040

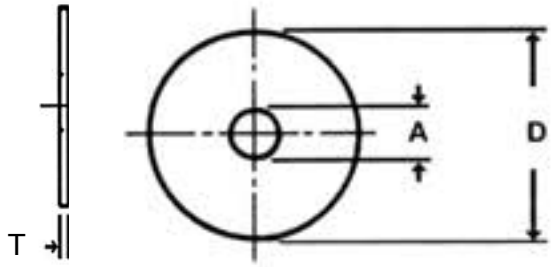

Example of Part Number: AN970-4 = 1/4 bolt size - 0.265 ID - 0.063 thickness

Material: Steel
Finish: Cadmium Plate QQ-P-416 Type II, Class 2

All dimensions listed are in inches unless otherwise specified.
Tolerance: decimals + or - .10
Washers must be flat within 0.005 for sizes up to .875 inch O.D. and within 0.010

Dash Number	Bolt Size	A	D	T	Superseded Part
3	No. 10 -or- 3/16	0.203	0.875	0.063	MS63040-3
4	1/4	0.265	1.125		-4
5	5/16	0.328	1.375		-5
6	3/8	0.390	1.625		-6
7	7/16	0.453	1.812	0.109	-7
8	1/2	0.515	2.000		-8
9	9/16	0.578	2.188	0.125	-9
10	5/8	0.640	2.375		-10

AN960

Flat Washer

See page 28

Material Specification	Code	Finish Specification (color)	Code
300 SS, (75 KSI MN UTS) .032 - .090	C	Passivate per QQ-P-35 (plain)	R
301 SS, (125 KSI MN UTS) .016 ONLY	C	Passivate per QQ-P-35 (plain)	R
2024 T3 Aluminum (58 KSI MN UTS)	D	Chemical Treat per MIL-C-5541 Class 3, Conductive (gold)	J
2024 T3 Aluminum (58 KSI MN UTS)	D	Anodize per MIL-A-8625 Class 2, non-conductive (gray	K
2024 T3 Aluminum (58 KSI MN UTS)	D	None, (natural appearance of material)	H
A 286 High Temp SS, (160 KSI MN UTS)	E	Cadmium Plate per QQ-P-416, Type II Class 2, (gold)	P
A 286 High Temp SS, (160 KSI MN UTS)	E	Passivate per QQ-P-35 (plain)	R
1020 Carbon Steel, (55 KSI MN UTS)	F	Cadmium Plate per QQ-P-416, Type II Class 2, (gold)	P
4130 Alloy Steel (90 KSI MN UTS)	G	Cadmium Plate per QQ-P-416, Type II Class 2, (gold)	P

Fastener Type	Nominal Inside Diameter	Inside Diameter + or - .010	Outside Diameter + .020, -005	Size and Thickness Number			
				.016 Thick	.032 Thick	.063 Thick	.090 Thick
Screws	2	0.099	0.250	N216	N232		
	3	0.105	0.250	N316	N332		
	4	0.125	0.312	N416	N432		
	6	0.140	0.438	N516	N532	N542 (.042 Thickness)	
	6	0.149	0.375	N616	N632		
	8	0.174	0.375	N816	N832		
	9	0.188	0.500	N949 (.049 Thickness)			
Bolts	10 or 3/16	0.203	0.438	0316	0332	0363	
	11	0.234	0.625	N1165 (.065 Thickness)			
	1/4	0.265	0.500	0416	0432	0463	
	5/16	0.328	0.562	0516	0532	0563	
	3/8	0.390	0.625	0616	0632	0663	
	7/16	0.453	0.750	0716	0732	0763	
	1/2	0.515	0.875	0816	0832	0863	
	9/16	0.578	1.062	0916	0932	0963	
	5/8	0.640	1.188	1016	1032	1063	
	3/4	0.765	1.312	1216	1232		1290
	7/8	0.890	1.500	1416	1432		1490
	1	1.015	1.750	1616	1632		1690
	1-1/16	1.078	1.812	1716	1732		1790
	1-1/8	1.140	1.875	1816	1832		1890
	1-1/4	1.265	2.000	2016	2032		2090

Spencer Aircraft provides the information in this catalog for its customers as a ***reference only*** and it is not intended for design or guarantee of accuracy. Though it is our policy to ship all orders in a timely manner, Spencer Aircraft cannot guarantee that all items will be in stock at all times.

NAS1149

Replaces AN960

EXAMPLE OF THE PART NUMBER

AN960 X C 616 LL = or CRES Steel Washer for 3/8 Bolt Screw Size .016" thick Black Oxide Coated per MIL-C-13924

- LL — THICKNESS CODE
- 616 — BOLT OR SCREW SIZE
- C — MATERIAL CODE
- X — COATING CODE
- AN960 — BASIC PART NUMBER

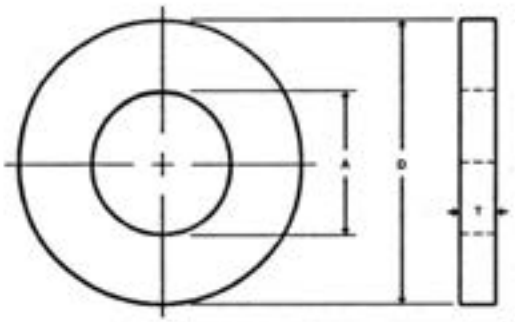

Bolt or Screw Size	A Diameter (+ - .010)	B +.020 -.005 Diameter	T	Carbon Steel CAD II Plated	DASH NUMBERS				Alternate NAS Part Numbers
					Passivated (Corrosion Resistant Steel)	Chemical Conversion Coating	Anodized Surfaces	Untreated	
						Aluminum Alloy			
3	0.105	0.250	0.016	3L 3	C3L C3	JD3L JD3	KD3L KD3	D3L D3	NAS1149FN332P NAS1149FN316P
4	0.125	0.312	0.032	4L 4	C4L C4	JD4L JD4	KD4L KD4	D4L D4	NAS1149FN432P NAS1149FN416P
5	0.140	0.438	0.042	5	C5	JD5	KD5	D5	NAS1149FN532P NAS1149FN516P
6	0.149	0.375	0.016	6L 6	C6L C6	JD6L JD6	KD6L KD6	D6L D6	NAS1149FN632P NAS1149FN616P
8	0.174		0.032	8L 8	C8L C8	JD8L JD8	KD8L KD8	D8L D8	NAS1149FN832P NAS1149FN816P
9	0.188	0.500	0.049	9	C9	JD9	KD9	D9	NAS1149FN949P
10	0.203	0.438	0.016 0.032 0.063	10L 10	C10L C10	JD10LL JD10L JD10	KD10LL KD10L KD10	D10L D10	NAS1149F0332P NAS1149F0363P
11	0.234	0.625	0.065	11	C11	JD11	KD11	D11	
1/4	0.265	0.500	0.016 0.032 0.063	416L 416	C416L C416	JD416L JD416	KD416L KD416	D416L D416	NAS1149F0432P NAS1149F0463P
5/16	0.328	0.562		516L 516	C516L C516	JD516L JD516	KD516L KD516	D516L D516	NAS1149F0532P NAS1149F0563P
3/8	0.390	0.625		616LL 616L 616	C616LL C616L C616	JD616L JD616	KD616L KD616	D616L D616	NAS1149F0632P NAS1149F0663P
7/16	0.453	0.750	0.032 0.090	716L 716	C716L C716	JD716L JD716	KD716L KD716	D716L D716	NAS1149F0732P NAS1149F0763P
1/2	0.515	0.875		816L 816	C816L C816	JD816L JD816	KD816L KD816	D816L D816	NAS1149F0832P NAS1149F0863P
9/16	0.578	1.062		916L 916	C916L C916	JD916L JD916	KD916L KD916	D916L D916	NAS1149F0932P NAS1149F0963P
5/8	0.64	1.188		1016L 1016	C1016L C1016	JD1016L JD1016	KD1016L KD1016	D10116L D1016	NAS1149F1032P NAS1149F1063P
3/4	0.765	1.312		1216L 1216	C1216L C1216	JD1216L JD1216	KD1216L KD1216	D1216L D1216	NAS1149F1232P NAS1149F1290P
7/8	0.890	1.500		1416L 1416	C1416L C1416	JD1416L JD1416	KD1416L KD1416	D1416L D1416	NAS1149F1432P NAS1149F1490P
1	1.015	1.75		1616L 1616	C1616L C1616	JD1616L JD1616	KD1616L KD1616	D1616L D1616	NAS1149F1632P NAS1149F1690P

Spencer Aircraft provides the information in this catalog for its customers as a ***reference only*** and it is not intended for design or guarantee of accuracy. Though it is our policy to ship all orders in a timely manner, Spencer Aircraft cannot guarantee that all items will be in stock at all times.

AN960 to NAS1149 Washers

Cross Reference Chart

OLD AN960 DASH NUMBER	NEW NAS1149 SIZE NUMBER	OLD AN960 DASH NUMBER	NEW NAS1149 SIZE NUMBER	OLD AN960 DASH NUMBER	NEW NAS1149 SIZE NUMBER	OLD AN960 DASH NUMBER	NEW NAS1149 SIZE NUMBER
AN960-2	NAS1149FN232P	AN960C2	NAS1149CN232R	AN960JD2	NAS1149DN232J	AN960KD2	NAS1149DN232K
AN960-2L	NAS1149FN216P	AN960C2L	NAS1149CN216R	AN960JD2L	NAS1149DN216J	AN960KD2L	NAS1149DN216K
AN960-3	NAS1149FN332P	AN960C3	NAS1149CN332R	AN960JD3	NAS1149DN332J	AN960KD3	NAS1149DN332K
AN960-3L	NAS1149FN316P	AN960C3L	NAS1149CN316R	AN960JD3L	NAS1149DN316J	AN960KD3L	NAS1149DN316K
AN960-4	NAS1149FN432P	AN960C4	NAS1149CN432R	AN960JD4	NAS1149DN432J	AN960KD4	NAS1149DN432K
AN960-4L	NAS1149FN416P	AN960C4L	NAS1149CN416R	AN960JD4L	NAS1149DN416J	AN960KD4L	NAS1149DN416K
AN960-5	NAS1149FN542P	AN960C5	NAS1149CN542R	AN960JD5	NAS1149DN542J	AN960KD5	NAS1149DN542K
AN960-6	NAS1149FN632P	AN960C6	NAS1149CN632R	AN960JD6	NAS1149DN632J	AN960KD6	NAS1149DN632K
AN960-6L	NAS1149FN616P	AN960C6L	NAS1149CN616R	AN960JD6L	NAS1149DN616J	AN960KD6L	NAS1149DN616K
AN960-8	NAS1149FN832P	AN960C8	NAS1149CN832R	AN960JD8	NAS1149DN832J	AN960KD8	NAS1149DN832K
AN960-8L	NAS1149FN816P	AN960C8L	NAS1149CN816R	AN960JD8L	NAS1149DN816J	AN960KD8L	NAS1149DN816K
AN960-9	NAS1149FN949P	AN960C9	NAS1149CN949R	AN960JD9	NAS1149DN949J	AN960KD9	NAS1149DN949K
AN960-10	NAS1149F0363P	AN960C10	NAS1149C0363R	AN960JD10	NAS1149D0363J	AN960KD10	NAS1149D0363K
AN960-10L	NAS1149F0332P	AN960C10L	NAS1149C0332R	AN960JD10L	NAS1149D0332J	AN960KD10L	NAS1149D0332K
				AN960JD10LL	NAS1149D0316J	AN960KD10LL	NAS1149D0316K
AN960-11	NAS1149FN1165P	AN960C11	NAS1149CN1165R	AN960JD11	NAS1149DN1165J	AN960KD11	NAS1149DN1165K
AN960-416	NAS1149F0463P	AN960C416	NAS1149C0463R	AN960JD416	NAS1149D0463J	AN960KD416	NAS1149D0463K
AN960-416L	NAS1149F0432P	AN960C416L	NAS1149C0432R	AN960JD416L	NAS1149D0416J	AN960KD416L	NAS1149D0416K
AN960-516	NAS1149F0563P	AN960C516	NAS1149C0563R	AN960JD516	NAS1149D0563J	AN960KD516	NAS1149D0563K
AN960-516L	NAS1149F0532P	AN960C516L	NAS1149C0532R	AN960JD516L	NAS1149D0516J	AN960KD516L	NAS1149D0516K
AN960-616	NAS1149F0663P	AN960C616	NAS1149C0663R	AN960JD616	NAS1149D0663J	AN960KD616	NAS1149D0663K
AN960-616L	NAS1149F0632P	AN960C616L	NAS1149C0632R	AN960JD616L	NAS1149D0616J	AN960KD616L	NAS1149D616K
AN960-616LL	NAS1149F0616P	AN960C616LL	NAS1149C0616R	AN960JD616LL	NAS1149D0616J	AN960KD616LL	NAS1149D0616K
AN960-716	NAS1149F0763P	AN960C716	NAS1149C0763R	AN960JD716	NAS1149D0763J	AN960KD716	NAS1149D0763K
AN960-716L	NAS1149F0732P	AN960C716L	NAS1149C0732R	AN960JD716L	NAS1149D0716J	AN960KD716L	NAS1149D0716K
				AN960JD716LL	NAS1149D0716J	AN960KD716LL	NAS1149D0716K
AN960-816	NAS1149F0863P	AN960C816	NAS1149C0863R	AN960JD816	NAS1149D0863J	AN960KD816	NAS1149D0863K
AN960-816L	NAS1149F0832P	AN960C816L	NAS1149C0832R	AN960JD816L	NAS1149D0816J	AN960KD816L	NAS1149D0816K
AN960-916	NAS1149F0963P	AN960C916	NAS1149C0963R	AN960JD916	NAS1149D0963J	AN960KD916	NAS1149D0963K
AN960-916L	NAS1149F0932P	AN960C916L	NAS1149C0932R	AN960JD916L	NAS1149D0916J	AN960KD916L	NAS1149D0916K
AN960-1016	NAS1149F1063P	AN960C1016	NAS1149C1063R	AN960JD1016	NAS1149D1063J	AN960KD1016	NAS1149D1063
AN960-1016L	NAS1149F1032P	AN960C1016L	NAS1149C1032R	AN960JD1016L	NAS1149D1016J	AN960KD1016L	NAS1149D1016K
AN960-1216	NAS1149F1290P	AN960C1216	NAS1149C1290R	AN960JD1216	NAS1149D1290J	AN960KD1216	NAS1149D1290K
AN960-1216L	NAS1149F1232P	AN960C1216L	NAS1149C1232R	AN960JD1216L	NAS1149D1216J	AN960KD1216L	NAS1149D1216K
AN960-1416	NAS1149F1490P	AN960C1416	NAS1149C1490R	AN960JD1416	NAS1149D1490J	AN960KD1416	NAS1149D1490K
AN960-1416L	NAS1149F1432P	AN960C1416L	NAS1149C1432R	AN960JD1416L	NAS1149D1416J	AN960KD1416L	NAS1149D1416K
AN960-1616	NAS1149F1690P	AN960C1616	NAS1149C1690R	AN960JD1616	NAS1149D1690J	AN960KD1616	NAS1149D1690K
AN960-1616L	NAS1149F1632P	AN960C1616L	NAS1149C1632R	AN960JD1616L	NAS1149D1616J	AN960KD1616L	NAS1149D1616K
AN960-1716	NAS1149F1790P	AN960C1716	NAS1149C1790R	AN960JD1716	NAS1149D1790J	AN960KD1716	NAS1149D1790K
AN960-1716L	NAS1149F1732P			AN960JD1716L	NAS1149D1716J	AN960KD1716L	NAS1149D1716K
AN960-1816	NAS1149F1890P	AN960C1816	NAS1149C1890R	AN960JD1816	NAS1149D1890J	AN960KD1816	NAS1149D1890K
AN960-1816L	NAS1149F1832P			AN960JD1816L	NAS1149D1816J	AN960KD1816L	NAS1149D1816K
AN960-2016	NAS1149F2090P	AN960C2016	NAS1149C2090R	AN960JD2016	NAS1149D2090J	AN960KD2016	NAS1149D2090K
AN960-2016L	NAS1149F2032P			AN960JD2016L	NAS1149D2016J	AN960KD2016L	NAS1149D2016K

Spencer Aircraft provides the information in this catalog for its customers as a ***reference only*** and it is not intended for design or guarantee of accuracy. Though it is our policy to ship all orders in a timely manner, Spencer Aircraft cannot guarantee that all items will be in stock at all times.

MS35333-MS35335-MS35338

Supersedes AN935 & AN936

Lock Washers



Internal Star



External Star



Helical Split

Use the listed MS part numbers to replace AN part numbers of like material and finish.

SEE THE CHARTS for desired size numbers. **SEE THE CROSS REFERENCE** for superseding part numbers.

Material >>	**Steel, Cadmium Plated**			**Stainless**
Style >>	**Internal Star**	**External Star**	**Helical Split**	**Helical Split**
Part Number>>	**MS35333-(xx)**	**MS35335-(xx)**	**MS35338-(xx)**	**MS35338-(xx)**
2	35	N/A	39	134
4	36	29	40	135
6	37	30	41	136
8	38	31	42	137
10	39	32	43	138
1/4	40	33	44	139
5/16	41	34	45	140
3/8	42	35	46	141
7/16	43	36	47	142
1/2	44	37	48	143
9/16	N/A	38	49	144
5/8	46	39	50	145
3/4	47	40	51	146
7/8	48	41	52	147
1	49	42	53	148

Spencer Aircraft provides the information in this catalog for its customers as a ***reference only*** and it is not intended for design or guarantee of accuracy. Though it is our policy to ship all orders in a timely manner, Spencer Aircraft cannot guarantee that all items will be in stock at all times.

CROSS REFERENCE CHART

Star & Split Lock Washers

OLD AN935 DASH #		NEW MS35338 SIZE #		OLD AN936A DASH #		NEW MS35333 SIZE #		OLD AN936B DASH #		NEW MS35335 SIZE #	
AN935-	2	MS35338	39	AN936A	2	MS35333	35	AN936B	2		
AN935-	4	MS35338	40	AN936A	4	MS35333	36	AN936B	4	MS35335	29
AN935-	6	MS35338	41	AN936A	6	MS35333	37	AN936B	6	MS35335	30
AN935-	8	MS35338	42	AN936A	8	MS35333	38	AN936B	8	MS35335	31
AN935-	10	MS35338	43	AN936A	10	MS35333	39	AN936B	10	MS35335	32
AN935-	416	MS35338	44	AN936A	416	MS35333	40	AN936B	416	MS35335	33
AN935-	516	MS35338	45	AN936A	516	MS35333	41	AN936B	516	MS35335	34
AN935-	616	MS35338	46	AN936A	616	MS35333	42	AN936B	616	MS35335	35
AN935-	716	MS35338	47	AN936A	716	MS35333	43	AN936B	716	MS35335	36
AN935-	816	MS35338	48	AN936A	816	MS35333	45	AN936B	816	MS35335	37
AN935-	916	MS35338	49	AN936A	916			AN936B	916	MS35335	38
AN935-	1016	MS35338	50	AN936A	1016	MS35333	47	AN936B	1016	MS35335	39
AN935-	1216	MS35338	51	AN936A	1216	MS35333	48	AN936B	1216	MS35335	40
AN935-	1416	MS35338	52	AN936A	1416	MS35333	49	AN936B	1416	MS35335	41
AN935-	1616	MS35338	53	AN936A	1616	MS35333	50	AN936B	1616	MS35335	43



Spencer Aircraft provides the information in this catalog for its customers as a ***reference only*** and it is not intended for design or guarantee of accuracy. Though it is our policy to ship all orders in a timely manner, Spencer Aircraft cannot guarantee that all items will be in stock at all times.

SPECIALTY WASHERS

Part #	Screw Size	Outside Diameter	Material
6	6	0.500	Shiny Stainless
A3236-012-935			Zinc Plated Steel .012
8	8	0.560	Shiny Stainless
A3236-017-935			Zinc Plated Steel .017
10	10	0.750	Shiny Stainless
A3236-020-935			Zinc Plated Steel .020
A3236-028-935			Zinc Plated Steel .028

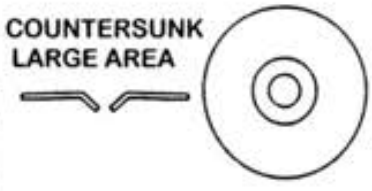

Tinnerman Countersunk Washers

Part #	Alt. Part #	Screw Size	I.D.	O.D.	Material
A3236-012-193	A3236-012-24A	6	0.140-0.147	0.500	Spring Steel Zinc Plated
A3135-017-193	A3135-017-24A	8	0.171	0.560	
A3235-020-193	A3235-020-24A	10	0.196	0.750	
A3235-028-193	A3235-028-24A	10	0.196	0.750	
A3475-020-193	A3475-020-24A	1/4	0.255-0.260	0.812	

DIMPLE WASHER



Part #	Screw Size	O.D.	Material
NAS390B4P	4	0.300	Chrome Plated Brass
NAS390B6P	6	0.370	
NAS390B8P	8	0.423	
NAS390B10P	10	0.480	



NAS391B4P	4	0.375	Chrome Plated Brass
NAS391B6P	6	0.438	
NAS391B8P	8	0.531	
NAS391B10P	10	0.593	



NAS1515

Nylon Washers

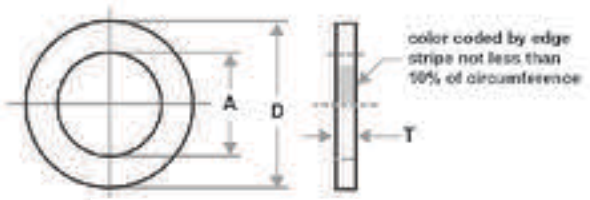

DASH #	Thread Size	I.D.	O.D.
02L 02	2 & 3	0.105	0.250
04L 04	4	0.125	0.312
06L 06	6	0.149	0.375
08L 08	8	0.174	0.375
3L 3 3H	10	0.203	0.438
4L 4 4H	1/4	0.265	0.500
5L 5 5H	5/16	0.328	0.562
6L 6 6H	3/8	0.390	0.625

Dash # Thickness Guide:

L = 0.031

Blank = 0.063

H = 0.094

DASH #	Thread Size	I.D.	O.D.
7L 7 7H	7/16	0.453	0.750
8L 8 8H	1/2	0.515	0.875
9L 9 9H	9/16	0.578	1.062
10L 10 10H	5/8	0.640	1.188
12L 12 12H	3/4	0.765	1.312
14L 14 14H	7/8	0.890	1.500
16L 16 16H	1	1.015	1.750

253-848-9349
SpencerAircraft.com

Spencer Aircraft provides the information in this catalog for its customers as a ***reference only*** and it is not intended for design or guarantee of accuracy. Though it is our policy to ship all orders in a timely manner, Spencer Aircraft cannot guarantee that all items will be in stock at all times.

MS20002

High Strength Washers - Countersunk & Plain

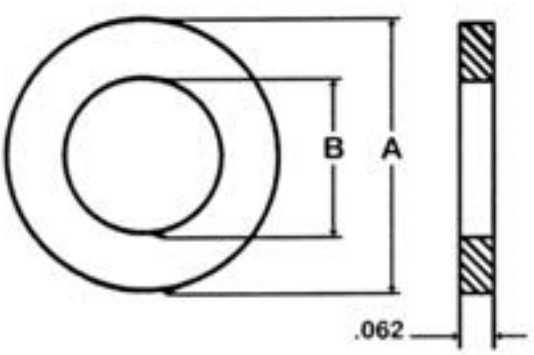

Thread Size	MS Part Number		A Diameter	B Diameter		D Diameter	Flatness Tolerance
	Countersunk	Plain		Max.	Min.		Max.
1/4	MS20002C4	MS20002-4	0.531	0.260	0.252	0.078	0.007
5/16	MS20002C5	MS20002-5	0.593	0.324	0.315		
3/8	MS20002C6	MS20002-6	0.687	0.388	0.372		
7/16	MS20002C7	MS20002-7	0.781	0.451	0.441		
1/2	MS20002C8	MS20002-8	0.875	0.515	0.504		
9/16	MS20002C9	MS20002-9	0.968	0.579	0.568		0.010
5/8	MS20002C10	MS20002-10	1.062	0.643	0.631		
3/4	MS20002C12	MS20002-12	1.250	0.770	0.757		
7/8	MS20002C14	MS20002-14	1.437	0.897	0.884		
1	MS20002C16	MS20002-16	1.625	1.025	1.010		

MATERIAL: Alloy Steel, Federal Standard No. 66, Steel No. 1330 or 4130

HEAT TREAT: 125,000 to 145,000 psi Specification MIL-H-6875

FINISH: Cadmium Plating per QQ-P-416 Type II, Class 2-parts



MS20392 SERIES

Clevis Pins

Diameter - Head Size - Hole Size

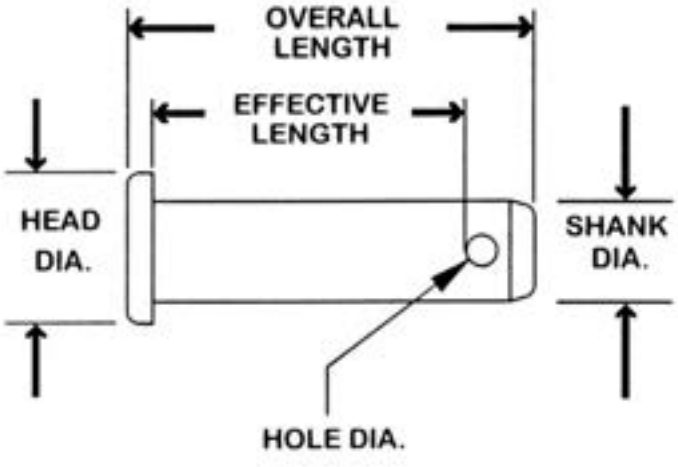

Help With The Selection of Part Numbers:

This entire series of clevis pins share the same first seven digits preceding the - (dash). The first number ***after*** the dash denotes the diameter.
The letter **"C"** indicates the material make-up as alloy steel (4037, 4130 or 8630) with Cadmium II plating.
The number after the letter **"C"** indicates the effective length in 1/32nd of an inch.

PLEASE REFER TO THE "EFFECTIVE LENGTH" CHART.

When replacing an "AN" clevis pin, please note that the digits identifying effective length are identical to the "MS" clevis pin part number.
The digits preceding the effective length symbols are different. Please note the example sited below for greater clarification.
To calculate overall length, add "L" factor to the effective length.

Example of Part Number:

MS20392-3C47	1/4 diameter	Steel, Cadmium II Plating	1.469 Effective Length	1.672 OAL	Alt # AN394-47

Diameter MS20392	Shank Diameter	Maximum Diameter	Minimum Diameter	Hole Diameter + OR - .010	Head Diameter	"L" Factor	OLD "AN" NUMBER
1C	1/8	0.125	0.123	0.070	0.205	0.172	AN392-
2C	3/16	0.188	0.186	0.076	0.312		AN393-
3C	1/4	0.250	0.248		0.375	0.203	AN394-
4C	5/16	0.312	0.310	0.106	0.437	0.250	AN395-
5C	3/8	0.375	0.373		0.500		AN396-
6C	7/16	0.438	0.436		0.562	0.281	AN397-
7C	1/2	0.500	0.498		0.625		AN398-

NOTE: all dimensions in inches

Spencer Aircraft provides the information in this catalog for its customers as a ***reference only*** and it is not intended for design or guarantee of accuracy. Though it is our policy to ship all orders in a timely manner, Spencer Aircraft cannot guarantee that all items will be in stock at all times.

MS20392 SERIES

Clevis Pins

Dash # - Effective Length - Overall Length

Dash Number	Effective Length + or - .010	1C, Overall + or - .010	2C, Overall + or - .010	3C, Overall + or - .010	4C, Overall + or - .010	5C, Overall + or - .010	6C, Overall + or - .010	7C, Overall + or - .010
7	0.219	0.391	0.391					
9	0.281	0.453	0.453					
11	0.281	0.516	0.516	0.547	0.594			
13	0.406	0.578	0.578	0.609	0.656			
15	0.469	0.641	0.641	0.672	0.719	0.719	0.75	0.75
17	0.531	0.703	0.703	0.734	0.781	0.781	0.812	0.812
19	0.594	0.766	0.766	0.797	0.844	0.844	0.875	0.875
21	0.656	0.828	0.828	0.859	0.905	0.905	0.937	0.937
23	0.719	0.891	0.891	0.922	0.969	0.969	1	1
25	0.781	0.953	0.953	0.984	1.031	1.031	1.062	1.062
27	0.844	1	1	1.047	1.094	1.094	1.125	1.125
29	0.905	1.078	1.078	1.109	1.156	1.156	1.187	1.187
31	0.969	1.141	1.141	1.172	1.219	1.219	1.25	1.25
33	1.031	1.203	1.203	1.234	1.281	1.281	1.312	1.312
35	1.094	1.266	1.266	1.297	1.344	1.344	1.375	1.375
37	1.156	1.328	1.328	1.359	1.406	1.406	1.437	1.437
39	1.219	1.391	1.391	1.422	1.469	1.469	1.500	1.500
41	1.281	1.453	1.453	1.484	1.531	1.531	1.562	1.562
43	1.344	1.516	1.516	1.547	1.594	1.594	1.625	1.625
45	1.406	1.578	1.578	1.609	1.656	1.656	1.687	1.687
47	1.469	1.641	1.641	1.672	1.719	1.719	1.75	1.75
49	1.531	1.703	1.703	1.734	1.781	1.781	1.812	1.812
51	1.594	1.766	1.766	1.797	1.844	1.844	1.875	1.875
53	1.656	1.828	1.828	1.859	1.906	1.906	1.937	1.937
55	1.719	1.891	1.891	1.922	1.969	1.969	2	2
57	1.781	1.953	1.953	1.984	2.031	2.031	2.062	2.062
59	1.844	2.016	2.016	2.047	2.094	2.094	2.125	2.125
61	1.905	2.078	2.078	2.109	2.156	2.156	2.187	2.187
63	1.969	2.141	2.141	2.172	2.219	2.219	2.25	2.25
65	2.031	2.203	2.203	2.234	2.281	2.281	2.312	2.312

COTTER PIN AND WASHER SIZES FOR USE WITH CLEVIS PINS

USE MS24665 COTTER PIN

MS Number	Corrosion Resisting Steel	Carbon Steel	Use Flat Washer Number
MS20392-1	-151	-132	AN960-6
MS20392-2			AN960-10
MS20392-3			AN960-416
MS20392-4	-300	-283	AN960-516
MS20392-5			AN960-616
MS20392-6			AN960-716
MS20392-7	-302	-285	AN960-816

Spencer Aircraft provides the information in this catalog for its customers as a ***reference only*** and it is not intended for design or guarantee of accuracy. Though it is our policy to ship all orders in a timely manner, Spencer Aircraft cannot guarantee that all items will be in stock at all times.

MS24665 SERIES

Cotter Pins

Replaces AN380 & AN381

NOMINAL DIAMETERS - STEEL, CADMIUM PLATED MS24665-(XXX)

Length (inches)	1/32	3/64	1/16	5/64	3/32	1/8	5/32	3/16
1/4	1	65						
3/8	3	67	130					
1/2	5	69	132	208	281	349	417	
3/4	7	71	134	210	283	351	418	490
1	9	73	136	212	285	353	419	491
1-1/4	10	74	138	214	287	355	421	493
1-1/2	11	75	140	216	289	357	423	495
1-3/4	12	76	142	218	291	359	425	497
2	13	77	143	219	292	360	426	498
2-1/4					293	361	427	499
2-1/2	14	78	144	220	294	362	428	500
2-3/4							429	501
3	15	79	145	221	295	363	430	502

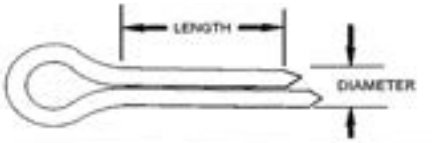

NOMINAL DIAMETERS - STAINLESS STEEL MS24665-(XXX)

Length (inches)	1/32	3/64	1/16	5/64	3/32	1/8	5/32	3/16
1/4	18	82	1010					
5/16	1001	83	148 (1011)					
3/8	20 (1002)	84	149 (1012)					
7/16	1003	85	150 (1013)					
1/2	22	86	151	227	298	366	435	
5/8		87	152	228	299			
3/4	24	88	153	229	300	368	436	508
7/8		89	154	230	301	369		
1	26	90	155	231	302	370	437	509
1-1/8				232	303	371	438	
1-1/4	27	91	157	233	304	372	439	511
1-3/8				234	305	373	440	
1-1/2	28	92	159	235	306	374	441	513
1-5/8				236	307	375	442	514
1-3/4			161	237	308	376	443	515
2			162	238	309	377	444	516
2-1/4					310	378	445	517
2-1/2			163	239	311	379	446	518

253-848-9349
SpencerAircraft.com

Spencer Aircraft provides the information in this catalog for its customers as a ***reference only*** and it is not intended for design or guarantee of accuracy. Though it is our policy to ship all orders in a timely manner, Spencer Aircraft cannot guarantee that all items will be in stock at all times.

HINGE PIN

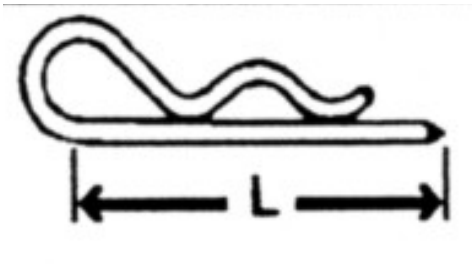

Safety Pin AN415-	Wire Diameter	Length in Inches
1-(X)	0.080 +.000/-.002	(X) 1, 2, 3, 4, 5, 6, 7, 8, 10, 12, 13, 18, 19, 20, 25, 26
2	0.080 +.000/-.002	1.938
3	0.0295	0.594
4	0.0585	1.125
5	0.0725	1.438
6	0.0915	1.875
7	0.1480	2.688

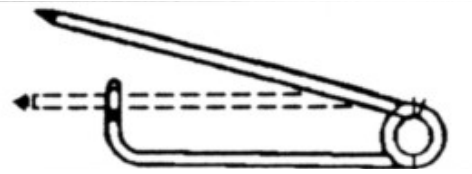

Safety Pin AN416-	Wire Diameter	Length in Inches
1	0.051	1-1/16
2	0.041	15/16
3	0.080	2.65

MS20253

Hinge Pin

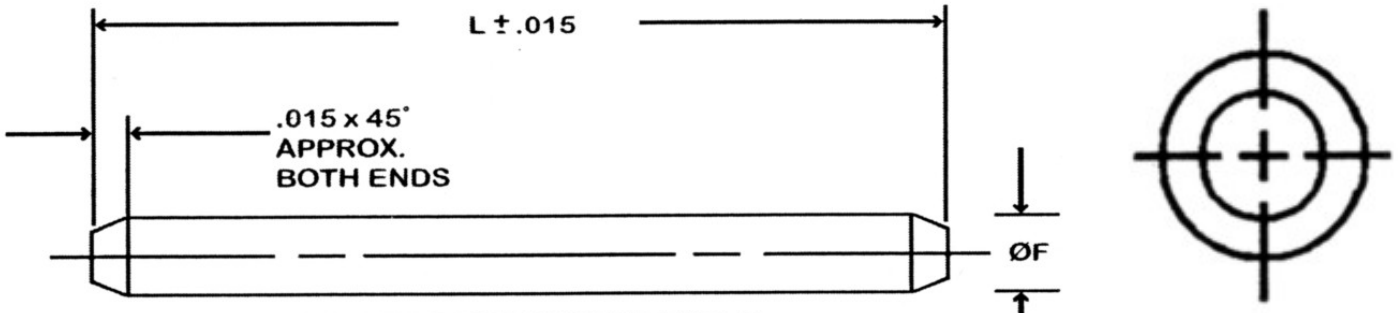

EXAMPLE OF THE PART NUMBER

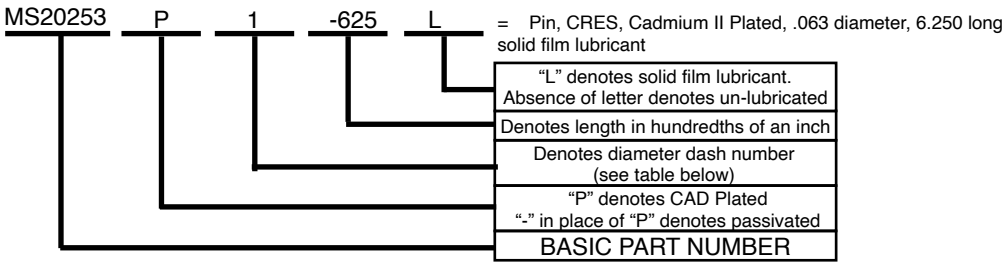

DIAMETER DASH NUMBER TABLE

Dash Number	1	2	3	4	5
F +.001 -.001	0.062	0.089	0.117	0.179	0.129

Requirements:

Material: Corrosion Resistant Steel per 00-W-423 Form I, condition B (straightened and cut lengths) composition FS 302, FS 304, or FS 316

Finish: Cadmium II Plate per 00-P-416 Type II, Class 2 or passivate per 00-P-35

Lubrication: when specified, Dry Film Lubricant per MIL-L-46010

Spencer Aircraft provides the information in this catalog for its customers as a ***reference only*** and it is not intended for design or guarantee of accuracy. Though it is our policy to ship all orders in a timely manner, Spencer Aircraft cannot guarantee that all items will be in stock at all times.

MS20257
Continuous Hinge

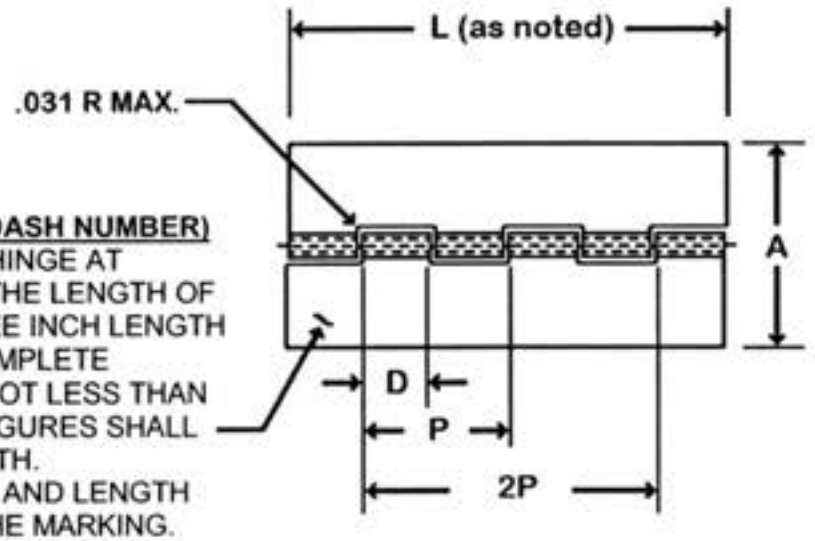

THE MARKING **MS20257-(SIZE DASH NUMBER)** SHALL BE IMPRESSED IN THE HINGE AT REGULAR INTERVALS ALONG THE LENGTH OF THE HINGE SO THAT ANY THREE INCH LENGTH WILL SHOW AT LEAST ONE COMPLETE IDENTIFICATION IN FIGURES, NOT LESS THAN .06 INCH HIGH. DEPRESSED FIGURES SHALL NOT EXCEED .010 INCH IN DEPTH. DESIGNATION FOR ANODIZING AND LENGTH SHALL NOT BE INCLUDED IN THE MARKING.

1/ = un-anodized aluminum
2/ = anodized aluminum

3/ = aluminum alloy hinge
2/ = corrosion resistant steel (CRES) hinge

Requirements:

Material: Aluminum alloy, 5052, H24 or H34 per 00-A250/8
Corrosion Resistant Steel per ASTM

Finish: Aluminum alloy, anodized, MIL-A-0625 Type II or none
Depending on coding - Corrosion Resistant Steel: not coated

Example Part Numbers:

MS20257-2-7200 = Complete hinge	Aluminum alloy, un-anodized	1.062 wide x 72 inches long	with CRES pin
MS20257P2-7200 = Complete hinge	Aluminum alloy, anodized	1.062 wide x 72 inches long	with CAD plated CRES pin
MS20257C2-7200 = Complete hinge	Corrosion Resistant Steel	1.062 wide x 72 inches long	with CRES pin

Dash Number for Complete Hinge			A Width Open +.016	B Thickness		D Loop +.001 -.008	Hole Diameter +.007 -.001		P Pitch	Pin Diameter (Ref)		Stock Length	
Aluminum		CRES		Alum. Alloy	CRES		Alum. Alloy	CRES		Alum. Alloy	CRES	Alum. Alloy	CRES
1/	2/									3/	4/		
-1	P1	C1	0.75	0.032	0.031	0.49	0.066	0.066	1	0.063	0.063	72”	72”
-2	P2	C2	1.062	0.040	0.037		0.093	0.093		0.09	0.09		
-3	P3	C3	1.250		0.050		0.093	0.121			0.118		
-4	P4	C4	1.500		0.062								
-5	P5	C5	2	0.051				0.183		0.18			
-6	P6	C6		0.064		1.99	0.183		4.047	0.18			

Spencer Aircraft provides the information in this catalog for its customers as a ***reference only*** and it is not intended for design or guarantee of accuracy. Though it is our policy to ship all orders in a timely manner, Spencer Aircraft cannot guarantee that all items will be in stock at all times.

MS20001

Structural Butt Hinge - Extruded

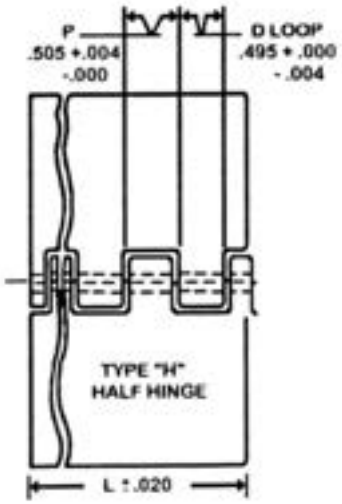

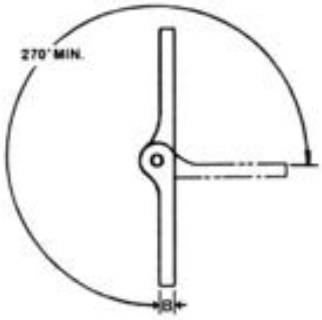

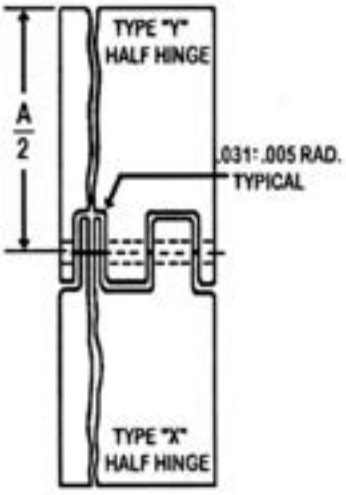

Dash Number	A Ref. Width Open	B (Thickness)		D Loop	Hole Diameter +.005 -.000	P Pitch	Pin Diameter
		Max.	Min.				
-2	1.062	0.056	0.044	0.494	0.003	1.00*	0.09
-3	1.250						
-4	1.500						
-5	1.750						
-6	2						
-9	2	0.076	0.084		0.183		0.18

Tolerances for dimensions on pitch shall not be cumulative

Material: Aluminum alloy 2024-T3511

designation for anodizing, chemical surface treatment, hinge style and length shall not be included in marking

Example Part Number:

MS20001-4-7200 Complete hinge bare finish Aluminum 2024-T3511 72 inches long
MS20001P4-7200 Complete hinge anodized finish Aluminum 2024-T3511 72 inches long



AIRCRAFT RIVETS

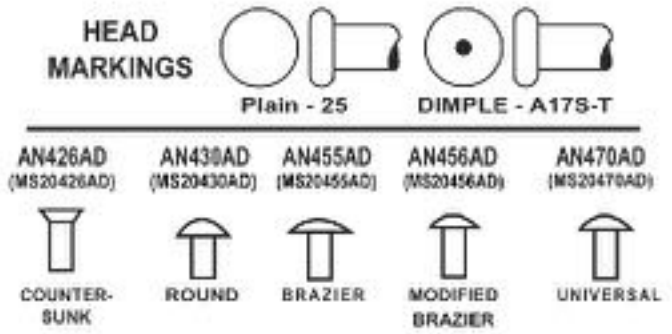

MS20470, MS20430, MS20456, MS20426, MS20442 RIVETS

Application:

Solid shank rivets are the most universally used device for the construction of sheet metal aircraft.

Material:

1100-H14	Aluminum Alloy: Designated A - no mark on head.
2217-T4	Aluminum Alloy: Designated AD - dimple in head.
2017-T4	Aluminum Alloy: Designated D - raised teat on head.
2024-T4	Aluminum Alloy: Designated DD - two raised dashes on head.
5056-H12	Aluminum Alloy: Designated B - raised cross on head.

A 1100 (2S) NO MARK	**AN430A** ROUND HEAD	**MS20426A** 100 D C'SUNK	**MS20470A** UNIVERSAL	**AN455A** BRAZIER		**AN456A** MODIFIED BRAZIER
AD 2117-T4 (A17ST) DIMPLE	**AN430AD** ROUND HEAD	**MS20426AD** 100 D C'SUNK	**MS20470AD** UNIVERSAL	**AN455AD** BRAZIER		**AN456AD** MODIFIED BRAZIER
D 2017-T4 (17ST) RAISED DOT	**AN430D** ROUND HEAD	**MS20426D** 100 D C'SUNK	**MS20470D** UNIVERSAL	**AN455D** BRAZIER		**AN456D** MODIFIED BRAZIER
DD 2024-T4 (24ST) RAISED DOUBLE DASH	**AN430DD** ROUND HEAD	**MS20426DD** 100 D C'SUNK	**MS20470DD** UNIVERSAL	**AN455DD** BRAZIER		**AN456DD** MODIFIED BRAZIER
B 5056 (56S) RAISED CROSS	**AN430B** ROUND HEAD	**MS20426B** 100 D C'SUNK	**MS20470B** UNIVERSAL	**AN455B** BRAZIER		**AN456B** MODIFIED BRAZIER
C COPPER NO MARK	**MS20435C** ROUND HEAD	**MS20427C** 100 D C'SUNK	**MS20615CU** UNIVERSAL	**AN420C** 90 D C'SUNK	**AN441C** FLAT HEAD	
F STAINLESS STEEL	**MS20435F** ROUND HEAD	**MS20427F** 100 D C'SUNK	**MS20613F** UNIVERSAL			
M MONEL	**MS20435M** ROUND HEAD	**MS20427M** 100 D C'SUNK	**MS20615M** UNIVERSAL		**AN441M** FLAT HEAD	
STEEL RECESSED TRIANGLE	**MS20435** ROUND HEAD	**MS20427** 100 D C'SUNK	**MS20613** UNIVERSAL	**AN420** 90 D C'SUNK	**AN441** FLAT HEAD	

253-848-9349
SpencerAircraft.com

Spencer Aircraft provides the information in this catalog for its customers as a ***reference only*** and it is not intended for design or guarantee of accuracy. Though it is our policy to ship all orders in a timely manner, Spencer Aircraft cannot guarantee that all items will be in stock at all times.

SOLID RIVETS

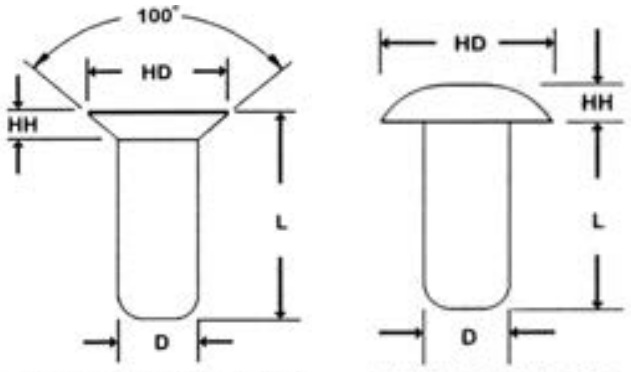

Head shape:

Designated by the AN number:
MS20426 - 100° Countersunk Head
MS20430 - Round Head
MS20455 - Brazier Head
MS20456 - Modified Brazier Head
MS20470 - Universal Head

Diameter:

The first dash number is the diameter in 1/32" increments.
Ex. MS20470AD4 is a universal head rivet made of 2117-T4 aluminum alloy rivet, 1/8" in diameter.

Length:

The second dash number is the length of the rivet in 1/16" increments.
Ex. MS20426DD3-5. This is a 100° countersunk head 2024-T4 aluminum alloy rivet, 3/32" in diameter, 5/16" long.

Material	Head Mark	Shear Strength	Universal Head	Countersunk Head
Aluminum 1100-F	None	10 ksi	MS20470A(D)-(L)	MS20426A(D)-(L)
Aluminum 2217-T4	Dimple	30 ksi	MS20470AD(D)-(L)	MS20426AD(D)-(L)
Steel, Cad II plated	Recessed Triangle	25 to 42 ksi	MS20613-(D)P(L)	MS20427-(D)C(L)
Stainless Steel	None	65 to 85 ksi	MS20613C(D)-(L)	MS20427F(D)-(L)
Monel, No Plating	Double Dimple	49 to 59 ksi	MS20615M(D)-(L)	MS20427M(D)-(L)
Monel Cad II Plated			MS20615-(D)MP(L)	MS20615-(D)MP(L)

Part Number Formula: (D) = diameter in 1/32" (L) = Length in 1/16"

Diameter Details and Pieces Per Pound

Rivet Sizing Reference Guide

Piece per pound listed are for Aluminum

Diameter #	3		4		5		6		8	
Diameter #	0.094 (3/32)		0.125 (1/8)		0.156 (5/32)		0.188 (3/16)		0.25 (1/4)	
Use Drill	# 40		# 30		# 21		# 11		"F"	
	Pieces per Pound		Pieces per Pound		Pieces per Pound		Pieces per Pound		Pieces per Pound	
Length in 1/16"	Universal	Counter-sunk	Universal	Counter-sunk	Universal	Counter-sunk	Universal	Counter-sunk	Universal	Counter-sunk
-2	6442	8519	3047	5620	1703		1134			
-2.5	5496	7183	2725	4046	1545		1032			
-3	4909	6209	2464	3497	1413	2097	947		426	
-3.5	4435	5468	2249	3080	1302	1862	875		400	
-4	4045	4885	2069	2751	1208	1674	813	1094	376	
-4.5	3718	4414	1915	2486	1126	1521	760	999	356	
-5	3440	4026	1782	2268	1054	1393	713	920	337	
-5.5	3200	3701	1667	2085	991	1285	671	852	320	
-6	2992	3424	1566	1929	936	1193	634	793	305	412
-7	2648	2979	1396	1678	841	1043	571	697	279	365
-8	2374	2638	1259	1485	763	927	519	622	257	328
-9	2152	2384	1147	1331	699	834	476	561	238	298
-10	1968	2143	1053	1207	645	757	440	511	221	273
-11	1812	1959	974	1104	598	694	408	469	207	252
-12	1680	1805	905	1017	558	641	381	434	194	234
-13	1565	1672	846	942	523	595	358	404	183	218
-14	1468	1559	794	878	492	555	337	377	173	204
-16	1300	1372	706	773	440	489	301	333	157	181
-18	1168	1225	637	690	398	438	273	299	143	163
-20	1060	1107	579	624	363	396	249	271	131	148
-24	895	928	491	522	309	333	213	228	113	125

Spencer Aircraft provides the information in this catalog for its customers as a ***reference only*** and it is not intended for design or guarantee of accuracy. Though it is our policy to ship all orders in a timely manner, Spencer Aircraft cannot guarantee that all items will be in stock at all times.

POP RIVET SELECTION CHART

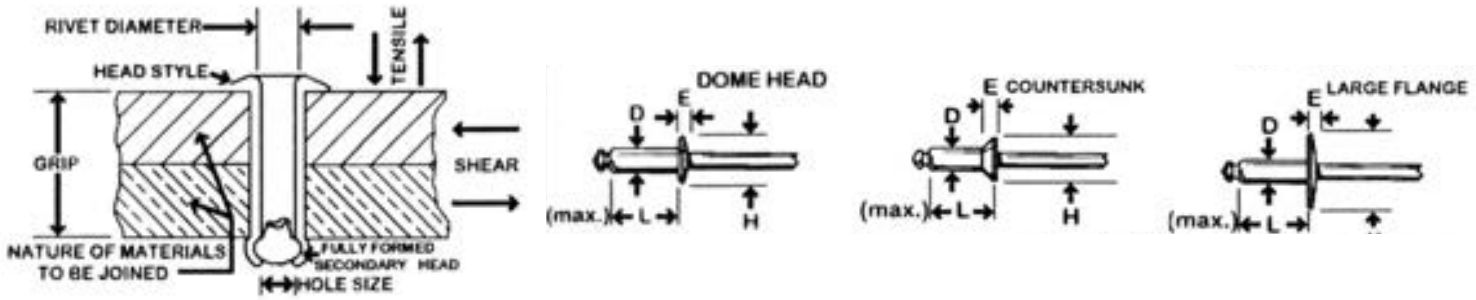

Sleeve Options:				Diameter:	Grip:	Stem / Mandrel Options:					
A	Aluminum	**D**	Dome	**4**	**2**	**A**	Aluminum	**BS**	Carbon Steel	**B**	Blind
S	Steel	**K**	120° Countersunk	**5**	**6**	**S**	Steel	**H**	Closed End	**LF**	Large Flange
SS	Stainless Steel	**H**	Hollow Core	**6**	**10**	**SS**	Stainless Steel	**CLD**	Closed End	**MG**	Zinc Plated
M	Monel	**Example Part Number : AK42SBLF** **Aluminum Rivet, 120° Countersunk Head 1/8 Diameter, Grip 0.062 - 0.125 - Steel Mandrel, Blind, Large Flange**								**H**	Hollow Core

5056 Aluminum Rivets with Coated Carbon Steel Mandrel

Typical Ultimate Strengths In Pounds

Part Number	D Rivet Body Diameter	Hole Size & Drill Number	Grip Range in Inches	L Length Under Head	H Head Diameter	E Head Height	Shear	Tensile
AD32BS AD34BS	.094 (3/32)	.097 - .100 #41	.020 - .125 .126 - .250	.225 .375	.178 - .198	0.032	90	120
AD41BS AD42BS AD43BS AD44BS AD45BS AD48BS AD410BS	.125 (1/8)	.129 - .133 #30	.032 - .062 .063 - .125 .126 - .187 .188 - .250 .251 - .312 .376 - .500 .501 - .625	.212 .275 .337 .400 .462 .650 .736	.238 - .262	0.04	170	220
AD42BSLF AD43BSLF AD44BSLF			.020 - .125 .126 - .187 .126 - .250	.275 .313 .400	.360 - .390			
AK42BS AK43BS AK44BS AK45BS			.063 - .125 .126 - .187 .188 - .250 .251 - .312	.275 .337 .400 .462	.207 - .233	0.035		
AD52BS AD53BS AD54BS AD56BS AD58BS	.156 (5/32)	.160 - .164 #20	.063 - .125 .126 - .187 .188 - .250 .251 - .375 .376 - .500	.300 .362 .425 .550 .675	.296 - .328	0.047	260	350
AK54BS AK56BS			.188 - .250 .251 - .375	.425 .550	.268 - .294	0.056		
AD54BSLF			.188 - .250	0.379	.448 - .488	0.045		
AD62BS AD64BS AD66BS AD68BS	.187 (3/16)	.192 - .196 #11	.020 - .125 .126 - .250 .251 - .375 .376 - .500	.325 .450 .575 .700	.356 - .394	0.055	380	500
AD610BS AD612BS AD614BS AD616BS			.501 - .625 .626 - .750 .751 - .875 .876 - 1.00	.825 .950 1.075 1.200		0.083		
AD64BSLF AD66BSLF AD68BSLF AD610BSLF AD612BSLF AD616BSLF			.020 - .250 .251 - .375 .376 - .500 .501 - .625 .626 - .650 .751 - 1.000	.450 .575 .700 .825 .950 1.200	.600 - .650			
AK64BS			.126 - .250	0.45	.335 - .361	0.055		

Spencer Aircraft provides the information in this catalog for its customers as a ***reference only*** and it is not intended for design or guarantee of accuracy. Though it is our policy to ship all orders in a timely manner, Spencer Aircraft cannot guarantee that all items will be in stock at all times.

POP RIVET SELECTION CHART

5052 Aluminum Rivets with Aluminum Mandrel

Part Number	D Rivet Body Diameter	Hole Size & Drill Number	Grip Range in Inches	L Length Under Head	H Head Diameter	E Head Height	Typical Ultimate Strengths in Pounds	
							Shear	Tensile
AD32ABS AD34ABS	.094 (3/32)	.097 - .100 #41	.020 - .125 .126 - .250	0.250 0.375	.178 - .198	0.032	85	135
AD41ABS AD42ABS AD43ABS AD44ABS AD45ABS AD46ABS AD48ABS AD410ABS	.125 (1/8)	.129 - .133 #30	.020 - .062 .063 - .125 .126 - .187 .188 - .250 .251 - .312 .313 - .375 .376 - .500 .501 - .625	.212 .275 .337 .400 .462 .525 .650 .775	.238 - .262	0.04 0.045	155	235
AD42ABSLF AD43ABSLF			.020 - .125 .126 - .250	.275 .337	.360 - .390	0.045		
AK42ABS AK43ABS AK44ABS AK46ABS			.063 - .125 .126 - .187 .188 - .250 .251 - .375	.265 .337 .400 .500	.207 - .233	0.035		
AK54ABS AK56ABS	0.156 (5/32)	.160 - .164 #20	.268 - .294 .313 - .375	.425 .550	.268 - .294	0.04	225	350
AD52ABS AD53ABS AD54ABS AD56ABS AD58ABS			.063 - .125 .126 - .187 .188 - .250 .251 - .375 .376 - .500	.275 .362 .425 .550 .675	.296 - .328	0.047		
AD54ABSLF			.188 - .250	0.379	.448 - .488	0.056		
AK62ABS AK63ABS AK64ABS AK66ABS	.187 (3/16	.192 - .198 #11	.063 - .125 .020 - .187 .126 - .250 .251 - .375	.357 .337 .450 .550	.335 - .361	0.045	315	500
AD62ABS AD64ABS AD66ABS AD68ABS AD610ABS AD612ABS AD616ABS			.020 - .125 .126 - .250 .251 - .375 .376 - .500 .501 - .625 .626 - .750 .876 - 1.000	.325 .450 .575 .700 .825 .950 1.200	.356 - .394	0.055		
AD64ABSLF AD66ABSLF AD68ABSLF AD610ABSLF AD612ABSLF			.126 - .250 .251 - .375 .376 - .500 .501 - .625 .626 - .750	.450 .575 .700 .825 .950	.600 - .650	0.083		

Carbon Steel Plated Rivets With Coated Carbon Steel Mandrel

SD32BS SD34BS	.094 (3/32)	.097 - .100 #41	.020 - .125 .126 - .250	.250 .375	.178 - .198	0.032	130	170
SD41BS SD42BS SD43BS SD44BS SD45BS SD46BS SD48BS	.125 (1/8)	.129 - .133 #30	.020 - .062 .063 - .125 .126 - .187 .188 - .250 .251 - .312 .313 - .375 .376 - .500	.212 .275 .337 .400 .462 .525 .650	.238 - .262	0.04	260	310
SD42BSLF SD44BSLF			.020 - .125 .126 - .250	.275 .400	.360 - .390	0.045		
SK42BS SK44BS			.063 - .125 .188 - .250	.275 .400	.207 - .233			
SD52BS SD53BS SD54BS SD56BS	0.156 (5/32)	.160 - .164 #20	.126 - .187 .188 - .250 .251 - .375 .376 - .500	.362 .425 .550 .675	.296 - .328	0.047	370	470
SD54BSLF			.188 - .250	0.379	.448 - .488	0.056		
SD62BS SD64BS SD66BS SD68BS SD610BS SD612BS SD616BS	.187 (3/16)	.192 - .198 #11	.020 - .125 .126 - .250 .251 - .375 .376 - .500 .501 - .625 .626 - .750 .876 - 1.000	.325 .450 .575 .700 .825 .950 1.200	.356 - .394	0.055	540	680
SD64BSLF SD66BSLF SD68BSLF SD610BSLF SD612BSLF			.126 - .250 .251 - .375 .376 - .500 .501 - .625 .626 - .750	.450 .575 .700 .825 .950	.600 - .650	0.053		

Spencer Aircraft provides the information in this catalog for its customers as a ***reference only*** and it is not intended for design or guarantee of accuracy. Though it is our policy to ship all orders in a timely manner, Spencer Aircraft cannot guarantee that all items will be in stock at all times.

POP RIVET SELECTION CHART

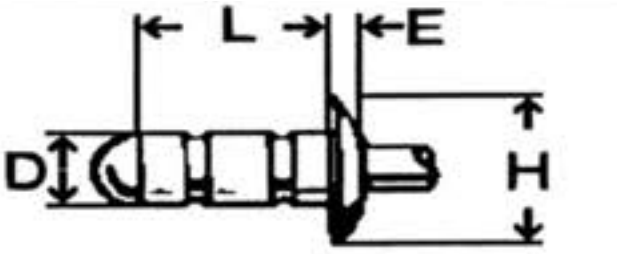

Open End Pop Rivets: 5052 Aluminum Rivets with Zinc Plated Steel Mandrel

Part Number	"D" Rivet Body Diameter	Hole Size & Drill Number	Grip Range in Inches	"L" Length Under Head	"H" Head Diameter	"E" Head Height	Typical Ultimate Strengths in Pounds	
							Shear	Tensile
AD41BSMG AD42BSMG AD43BSMG AD44BSMG AD45BSMG	.125 (1/8)	.129 - .133 #30	.032 - .062 .063 - .125 .126 - .187 .188 - .250 .251 - .312	.212 .275 .337 .440 .462	.238 - .262	0.035	170	220
AD52BSMG AD53BSMG AD54BSMG	.156 (5/32)	.160 - .164 #20	.063 - .125 .126 - .187 .188 - .250	.300 .362 .425	.296 - .328	0.047	260	350
AD62BSMG AD64BSMG AD66BSMG AD68BSMG	.187 (3/16)	.192 - .196 #11	.020 - .125 .126 - .250 .251 - .375 .376 - .500	.325 .450 .575 .700	.356 - .394	0.051	380	500
AK41BSMG AK42BSMG AK43BSMG AK44BSMG AK45BSMG AK46BSMG	.125 (1/8)	.129 - .133 #30	.031 - .062 .063 - .125 .126 - .187 .188 - .250 .251 - .312 .251 - .375	-- .275 .337 .400 .462 .500	.207 - .233	0.028	170	220

Stainless Steel Rivets with Stainless Steel Mandrel

SSD42SSBS SSD43SSBS SSD44SSBS SSD46SSBS SSD48SSBS	.125 (1/8)	.129 - .133 #30	.063 - .125 .126 - .187 .188 - .250 .313 - .375 .376 - .500	.275 .337 .400 .481 .628	0.25	0.04	520	600
SSD52SSBS SSD54SSBS SSD56SSBS	.156 (5/32)	.160 - .164 #20	.063 - .125 .126 - .250 .251 - .375	.300 .400 .550	0.312	0.047	785	1040
SSD62SSBS SSD64SSBS SSD66SSBS SSD68SSBS	.187 (3/16)	.192 - .196 #11	.063 - .125 .126 - .250 .251 - .375 .376 - .500	.325 .450 .575 .700	0.375	0.055	1150	1300

Plated Monel Rivets with Coated Carbon Steel Mandrel Domed Head

MD319BS	.109 (7/64)	.113 - .117 #33	.020 - .070	0.195	0.205	0.028	258	292
MD42BS MD43BS MD44BS MD45BS	.125 (1/8)	.129 - .133 #30	.032 - .125 .126 - .187 .188 - .250 .251 - .312	.265 .328 .390 .453	0.25	0.04	385	460
MD530BS MD540BS	.156 (5/32)	.160 - .164 #20	.101 - .160 .231 - .260	.325 .425	0.263	0.04	495	674
MD624BS MD636BS MD665BS	.187 (3/16)	0.102	.020 - .090 .151 - .200 .341 - .490	.265 .385 .675	0.32	0.055	742	843

Plated Monel Rivets with Coated Carbon Steel Mandrel, 120° Countersunk Head

MK319BS	.109 (7/64)	.113 - .117 #33	.020 - .090	0.238	0.192	0.028	258	292
MK419BS MK424BS MK429BS MK435BS MK440BS	.125 (1/8)	.129 - .133 #30	.030 - .100 .101 - .150 .151 - .200 .201 - .260 .261 - .310	.246 .296 .346 .406 .456	0.236	0.036	337	427

Spencer Aircraft provides the information in this catalog for its customers as a ***reference only*** and it is not intended for design or guarantee of accuracy. Though it is our policy to ship all orders in a timely manner, Spencer Aircraft cannot guarantee that all items will be in stock at all times.

POP RIVET SELECTION CHART

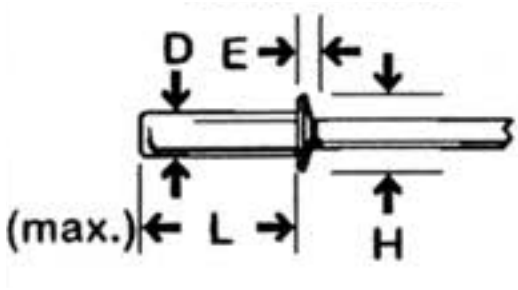

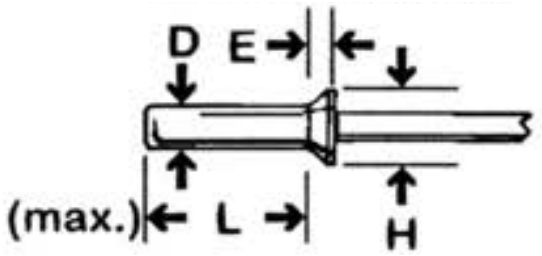

5056 Aluminum Rivets with Carbon Steel Mandrel, Domed Head, Closed End

Part Number	"D" Rivet Body Diameter	Hole Size & Drill Number	Grip Range in Inches	"L" Length Under Head	"H" Head Diameter	"E" Head Height	Typical Ultimate Strengths in Pounds	
							Shear	Tensile
AD41H AD42H AD43H AD44H AD45H AD46H AD48H	.125 (1/8)	.129 - .133 #30	.032 - .062 .063 - .125 .126 - .187 .188 - .250 .251 - .312 .313 - .375 .376 - .500	.237 .301 .362 .425 .487 .550 .675	0.23	0.041	305	385
AD52H AD53H AD55H	.156 (5/32)	.160 - .164 #20	.063 - .125 .126 - .187 .188 - .250	.315 .377 .502	0.317	0.056	430	605
AD62H AD64H AD66H AD68H	.187 (3/16)	.192 - .196 #11	.063 - .125 .125 - .250 .313 - .375 .376 - .500	.330 .455 .580 .705	0.375	0.071	575	840

1100 Aluminum Rivets Domed-Head with Aluminum Mandrel, Closed End

AD42AH AD43AH AD44AH	.125 (1/8)	.129 - .133 #30	.063 - .125 .126 - .187 .188 - .250	.301 .362 .440	0.23	0.041	105	105
AD54AH	.156 (5/32)	.160 - .164 #20	.063 - .250	0.312	0.317	0.066	155	155
AD62AH AD64AH AD66AH AD68AH	.187 (3/16)	.192 - .196 #11	.063 - .125 .126 - .250 .251 - .375 .376 - .500	.245 .470 .580 .705	0.375	0.071	220	310

5056 Aluminum Rivets with Carbon Steel Mandrel and 120° Countersunk Head, Closed End

AK41H AK42H AK43H AK44H AK45H	.125 (1/8)	.129 - .133 #30	.031 - .062 .063 - .125 .126 - .187 .188 - .250 .251 - .312	.237 .301 .362 .425 .488	0.248	0.051	305	385
AK51H AK52H AK53H	.156 (5/32)	.160 - .164 #20	.032 - .062 .063 - .125 .126 - .187	.378 .440 .503	0.327	0.066	430	605
AK64H AK66H	.187 (3/16)	0.192 - .196 #11	.126 - .250 .251 - .375	.455 .580	0.393	0.081	575	840

5056 Aluminum Rivets Domed-Head with Stainless Steel Mandrel, Closed End

AD64SSH AD66SSH	.187 (3/16)	.192 - .196 #11	.126 - .250 .251 - .375	.455 .580	0.375	0.071	575	840

Spencer Aircraft provides the information in this catalog for its customers as a ***reference only*** and it is not intended for design or guarantee of accuracy. Though it is our policy to ship all orders in a timely manner, Spencer Aircraft cannot guarantee that all items will be in stock at all times.

CHERRY RIVETS

MAX

Cherry is a registered trademark of Cherry Aerospace Fasteners, a division of Textron, Inc.

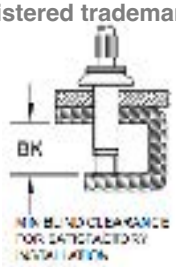

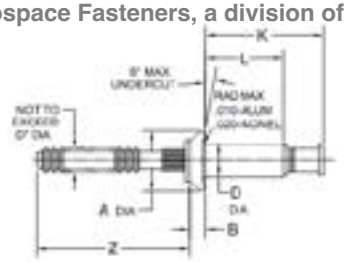

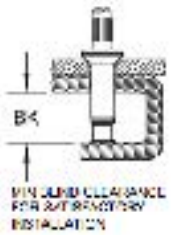

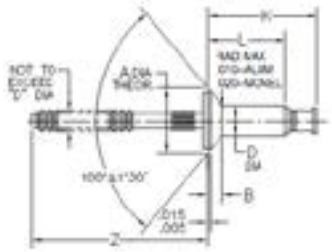

Rivet Number	Material			Aluminum		
	Sleeve	Stem	Collar	Sleeve	Stem	Collar
CR3213 CR3214 CR3242 CR3243 CR3245 CR3246	5056 Aluminum Alloy QQ-A-430	8740 Alloy Steel AMS 6322	A-286 Cres. AMS 5731	Chemical Film MIL-DTL-5541 Plain Color	Cadmium Plated QQ-P-416 Type II Class 2	Passivate AMS 2700
CR3223 CR3224 CR3252 CR3253 CR3255		15-7 PH Cres. AMS 5657			Cadmium Plated QQ-P-416, TYPE I CL. 2 OR PASSIVATE AMS 2700	
CR3523 CR3524 CR3552 CR3553 CR3555 CR3556	Monel QQ-N-281					
CR3523P CR3524P CR3552P CR3553P CR3555P CR3556P				Aluminum Coat MIL-DTL-83488		
CR3523EE CR3524EE CR3552EE CR3553EE				Aluminum Coat NAS4006		
CR3852 CR3853	Inco 600 AMS 5687	Inco X-750 AMS 5698				

Rivet Diameter	Sheet Thickness	SINGLE SHEAR					TENSILE						
		Aluminum			Monel		Aluminum			Monel			Inco
		Nominal		O/S		O/S	Nominal		O/S	NOMINAL		O/S	O/S
		3212 3213 3214 3222 3223 3224	3242 3243 3245 3246 3252 3253 3255	3522 3523 3524	3552 3553 3555 3556	3852 3853	3212 3213 3222 3223	3214 3224	3242 3243 3245 3246 3252 3253 3255	3522 3523	3524	3552 3553 3555 3556	3852 3853
1/8 (-4)	2 X .156	664	814	995	1220	1220	285	250	345	400	360	490	570
5/32 (-5)	2 X .187	1030	1245	1545	1865	1865	445	390	530	635	555	740	860
3/16 (-6)	2 X .219	1480	1685	2215	2525	2525	635	560	710	890	800	1000	1160
1/4 (-8)	2 X .281	2615	2925	3920	4390	4390	1125	1000	1260	1570	1410	1755	2030

Spencer Aircraft provides the information in this catalog for its customers as a ***reference only*** and it is not intended for design or guarantee of accuracy. Though it is our policy to ship all orders in a timely manner, Spencer Aircraft cannot guarantee that all items will be in stock at all times.

CHERRY RIVETS
MAX

Cherry is a registered trademark of Cherry Aerospace Fasteners, a division of Textron, Inc.

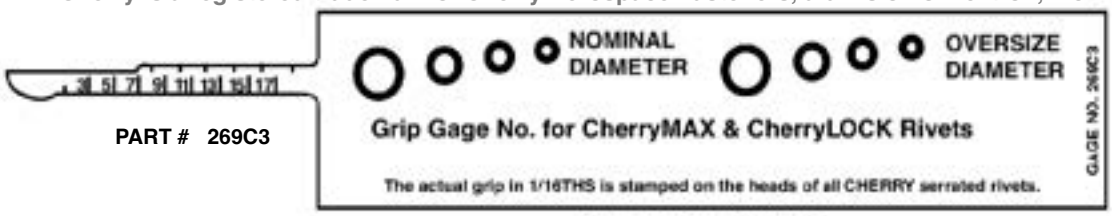

PART # 269C3

shown smaller than actual size

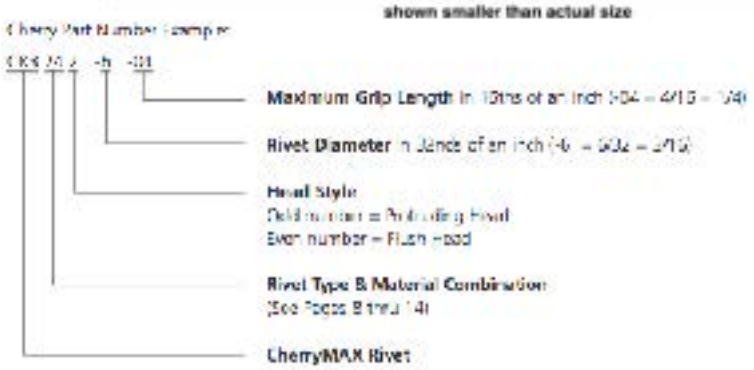

Universal Head Nominal Diameter	100° Flush Head Nominal Diameter	100° Flush Shear Head Nominal Diameter	Universal Head Oversize Diameter	100° Flush Head Oversize Diameter	Oval Countersink Oversize Diameter	120° Flush Head Oversize Diameter
CR3213 CR3223 CR3523 CR3523P CR3523EE CR9157 CR9163	CR3212 CR3222 CR3522 CR3522P CR3522EE CR9156 CR9162	CR3214 CR3224 CR3524 CR3524P CR3524EE	CR3243 CR3253 CR3553 CR3553P CR3553EE CR3853	CR3242 CR3252 CR3552 CR3552P CR3552EE CR3852	CR3245 CR3255 CR3555 CR3555P	CR3246 CR3556 CR3556P

DIAMETER DETAILS

Diameter Dash #	DIAMETER +.003-.001		HOLE LIMITS		Recommended Drill	
	Nominal	O/S	Nominal	O/S	Nominal	O/S
-4	.126	.140	.129 - .132	.143 - .146	30	27
-5	.157	.173	.160 - .164	.176 - .180	20	16
-6	.189	.201	.192 - .196	.205 - .209	10	5
-8	.253	.267	.256 - .261	.271 - .275	F	I

Materials		Ultimate Shear Strength (at room temp.)	Maximum Temperature (°F)
Sleeve	Stem		
5056 Aluminum	ALLOY STEEL	50,000 PSI	250
5056 Aluminum	CRES	50,000 PSI	250
MONEL	CRES	75,000 PSI	900
INCO 600	INCO X-750	75,000 PSI	1400

GRIP LIMITS

1/16 Range		1/8" Diameter			5/32" Diameter			3/16" Diameter			1/4" Diameter		
MIN	MAX	Dash #	L	K	Dash #	L	K	Dash #	L	K	Dash #	L	K
.033	.062	4-01	.161	.38	5-01	.187	.41	6-01	.219	.47			
.063	.125	4-02	.224	.45	5-02	.230	.47	6-02	.262	.51	8-02	.315	.59
.126	.187	4-03	.287	.51	5-03	.293	.53	6-03	.325	.57	8-03	.378	.65
.188	.250	4-04	.349	.57	5-04	.355	.59	6-04	.387	.64	8-04	.440	.72
.251	.312	4-05	.412	.63	5-05	.418	.65	6-05	.450	.70	8-05	.503	.78
.313	.375	4-06	.474	.70	5-06	.480	.72	6-06	.512	.76	8-06	.565	.84
.376	.437	4-07	.537	.76	5-07	.543	.77	6-07	.575	.82	8-07	.628	.90
.438	.500	4-08	.599	.82	5-08	.605	.84	6-08	.637	.88	8-08	.690	.97
.501	.562	4-09	.662	.88	5-09	.668	.90	6-09	.700	.95	8-09	.753	1.03
.563	.625				5-10	.730	.96	6-10	.762	1.01	8-10	.815	1.09
.626	.687				5-11	.793	1.02	6-11	.825	1.07	8-11	.878	1.15
.688	.750							6-12	.877	1.13	8-12	.940	1.22
.751	.812							6-13	.950	1.19	8-13	1.003	1.28
.813	.875										8-14	1.065	1.34

** THE FOLLOWING RIVETS ARE NOT AVAILABLE IN -01 LENGTHS:
100° FLUSH HEAD / NOMINAL DIAMETER
120° FLUSH HEAD / OVERSIZE DIAMETER

Spencer Aircraft provides the information in this catalog for its customers as a ***reference only*** and it is not intended for design or guarantee of accuracy. Though it is our policy to ship all orders in a timely manner, Spencer Aircraft cannot guarantee that all items will be in stock at all times.

CHERRY RIVETS

SELF-PLUGGING - UNIVERSAL HEAD

Cherry is a registered trademark of Cherry Aerospace Fasteners, a division of Textron, Inc.



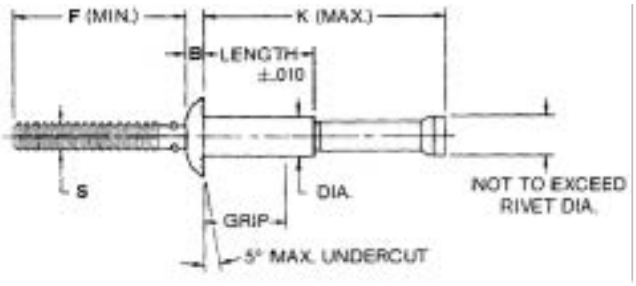

Material	Rivet Type	100° FLUSH HEAD		UNIVERSAL HEAD		MODIFIED TRUSS HEAD	
		Special Characteristics	Rivet Series #	Special Characteristics	Rivet Series #	Special Characteristics	Rivet Series #
ALUM. 2117-T4	PULL-THRU	MS20605	CR9116	MS20604	CR9117		CR91484
		OVERSIZED SHANK	CR9128	OVERSIZED SHANK	CR9129		
	SELF-PLUGGING	MS20601	CR9162	MS20600	CR9163		
		OVERSIZED SHANK	CR9178	OVERSIZED SHANK	CR9179		
ALUM. 5056	PULL-THRU	MS20605	CR9126	MS20604	CR9127		CR91464
	SELF-PLUGGING	MS20601	CR9156	MS20600	CR9157		
MONEL	PULL-THRU	MS20605	CR9516	MS20604	CR9517		CR95484
	SELF-PLUGGING	MS20601	CR9562	MS20600	CR9563		

Series #	MATERIAL		UNIVERSAL HEAD		NOMINAL DIAMETER		1/8	5/32	3/16	1/4
	Rivet	Stem	Rivet	Stem	Diameter Dash #		-4	-5	-6	-8
DIMENSIONS APPLICABLE TO ALL SERIES NUMBERS					S	± .003	.086	.108	.127	.170
					F	(MIN.)	3/4	3/4	3/4	1
CR9157 (MS20600B)	5056 ALUM. ALLOY	2017-T4 ALUM. ALLOY	MIL-A-8625 OR MIL-C-5541 (ORANGE)	MIL-A-8625 OR MIL-C-5541	DIA.	+ .003 - .001	1/8	5/32	3/16	1/4
					A		.250 ± .012	.312 ± .016	.375 ± .019	.500 ± .025
					B	+ .010 - .000	.054	.067	.080	.107
CR9163 (MS20600AD)	2117-T4 ALUM. ALLOY	2017-T4 ALUM. ALLOY	MIL-A-8625 OR MIL-C-5541	MIL-A-8625 OR MIL-C-5541	DIA.	+ .003 - .001	.134	.172	.203	.266
					A		.250 ± .012	.312 ± .016	.375 ± .019	.500 ± .025
					B	+ .010 - .000	.054	.067	.080	.107
CR9179 OVERSIZE			MIL-A-8625 OR MIL-C-5541 (BLUE)	MIL-A-8625 OR MIL-C-5541	DIA.	+ .003 - .001	.134	.172	.203	.266
					A		.250 ± .012	.312 ± .016	.375 ± .019	.500 ± .025
					B	+ .010 - .000	.054	.067	.080	.107
CR9279 OVERSIZE	5056 ALUM. ALLOY	2017-T4 ALUM. ALLOY	MIL-A-8625 OR MIL-C-5541 (RED)	MIL-A-8625 OR MIL-C-5541	DIA.	+ .003 - .001	.134	.172	.203	.266
					A		.250 ± .012	.312 ± .016	.375 ± .019	.500 ± .025
					B	+ .010 - .000	.054	.067	.080	.107
CR9563 (MS20600MP)	MONEL	MONEL	CADMIUM PLATED TYPE II		DIA.	+ .003 - .001	.134	.172	.203	.266
CR9563M (MS20600M)					A		.250 ± .012	.312 ± .016	.375 ± .019	.500 ± .025
					B	+ .010 - .000	.054	.067	.080	.107
CR9579 OVERSIZE	MONEL	MONEL	CADMIUM PLATED TYPE II		DIA.	+ .003 - .001	.134	.172	.203	.266
CR9579M OVERSIZE					A		.250 ± .012	.312 ± .016	.375 ± .019	.500 ± .025
					B	+ .010 - .000	.054	.067	.080	.107

GRIP		1/8			5/32			3/16			1/4		
Min	Max	Dash #	Length	K	Dash #	Length	K	Dash #	Length	K	Dash #	Length	K
^	.062	4-1	.160	.48	5-1	.182	.53	6-1	.205	.58			
.063	.125	4-2	.222	.60	5-2	.245	.62	6-2	.267	.70	8-2	.312	.85
.126	.187	4-3	.285	.73	5-3	.307	.78	6-3	.330	.83	8-3	.375	.97
.188	.250	4-4	.347	.85	5-4	.370	.87	6-4	.392	.95	8-4	.437	1.09
.251	.312	4-5	.410	.98	5-5	.432	1.03	6-5	.455	1.08	8-5	.500	1.22
.313	.375	4-6	.472	1.10	5-6	.495	1.12	6-6	.517	1.20	8-6	.562	1.34
.376	.437	4-7	.535	1.23	5-7	.557	1.28	6-7	.580	1.33	8-7	.625	1.47
.438	.500	4-8	.597	1.35	5-8	.620	1.40	6-8	.642	1.45	8-8	.687	1.59
.501	.562	4-9	.660	1.48	5-9	.682	1.56	6-9	.705	1.58	8-9	.750	1.72
.563	.625	4-10	.772	1.60	5-10	.745	1.68	6-10	.767	1.69	8-10	.812	1.84
.626	.687	4-11	.785	1.73	5-11	.807	1.74	6-11	.830	1.83	8-11	.875	1.97
.688	.750	4-12	.847	1.82	5-12	.870	1.86	6-12	.892	1.94	8-12	.937	2.09
.751	.812				5-13	.932	2.02	6-13	.955	2.08	8-13	1.000	2.22
.813	.875										8-14	1.062	2.34

253-848-9349
SpencerAircraft.com

Spencer Aircraft provides the information in this catalog for its customers as a ***reference only*** and it is not intended for design or guarantee of accuracy. Though it is our policy to ship all orders in a timely manner, Spencer Aircraft cannot guarantee that all items will be in stock at all times.

CHERRY RIVETS

SELF-PLUGGING - 100° FLUSH HEAD

Cherry is a registered trademark of Cherry Aerospace Fasteners, a division of Textron, Inc.

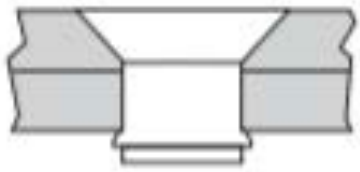

100°
FLUSH HEAD

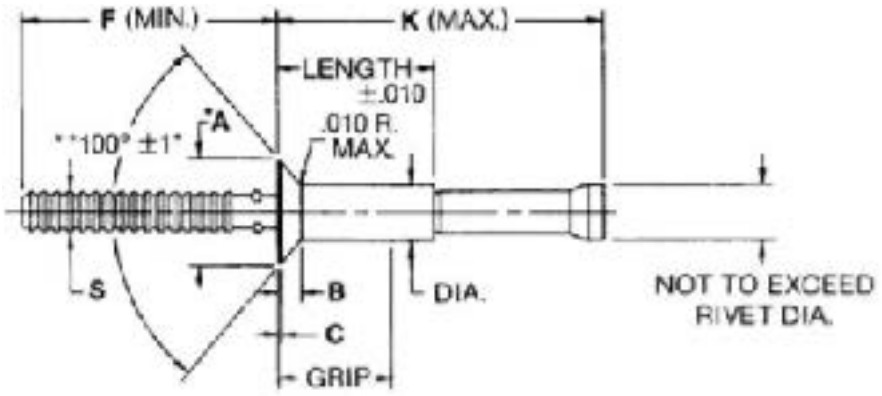

Series #	MATERIAL		UNIVERSAL HEAD		NOMINAL DIAMETER		1/8	5/32	3/16	1/4
	Rivet	Stem	Rivet	Stem	Diameter Dash #		-4	-5	-6	-8
DIMENSIONS APPLICABLE TO ALL SERIES NUMBERS					S	± .003	.086	.108	.127	.170
					F	(MIN.)	3/4	3/4	3/4	1
CR9156 (MS20600B)	5056 Aluminum Alloy	2017-T4 Aluminum Alloy	MIL-A-8625 OR MIL-C-5541 (ORANGE)	MIL-A-8625 OR MIL-C-5541	DIA.	+ .003 - .001	1/8	5/32	3/16	1/4
					A	± .004	.225	.286	.353	.476
					B	(REF.)	.042	.055	.070	.095
					C	± .002	.004			
CR9162 (MS20600AD)	2017-T4 Aluminum Alloy	2017-T4 Aluminum Alloy	MIL-A-8625 OR MIL-C-5541	MIL-A-8625 OR MIL-C-5541	DIA.	+ .003 - .001	1/8	5/32	3/16	1/4
					A	± .004	.225	.286	.353	.476
					B	(REF.)	.042	.055	.070	.095
					C	± .002	.004			
CR9178 OVERSIZE			MIL-A-8625 OR MIL-C-5541 (BLUE)	MIL-A-8625 OR MIL-C-5541	DIA.	+ .003 - .001	.134	.172	.203	.266
					A	± .004	.225	.286	.353	.476
					B	(REF.)	.038	.049	.063	.089
					C	± .002	.004			
CR9278 OVERSIZE	5056 Aluminum Alloy	2017-T4 Aluminum Alloy	MIL-A-8625 OR MIL-C-5541 (RED)	MIL-A-8625 OR MIL-C-5541	DIA.	+ .003 - .001	.134	.172	.203	.266
					A	± .004	.225	.286	.353	.476
					B	(REF.)	.038	.049	.063	.089
					C	± .002	.004			
CR9562 (MS20601MP)	Monel	Monel	Cadmium II Plated		DIA.	+ .003 - .001	.134	.172	.203	.266
					A	± .004	.225	.286	.353	.476
CR9562M (MS20601M)					B	(REF.)	.042	.055	.070	.095
					C	± .005	.010			
CR9578 OVERSIZE	Monel	Monel	Cadmium II Plated		DIA.	+ .003 - .001	.134	.172	.203	.266
					A	± .004	.225	.286	.353	.476
CR9578M OVERSIZE					B	(REF.)	.038	.049	.063	.089
					C	.005	.054	.067	.080	.107

GRIP		1/8			5/32			3/16			1/4		
Min	Max	Dash #	Length	K	Dash #	Length	K	Dash #	Length	K	Dash #	Length	K
^	.062	4-1	.160	.42									
^	.125	4-2	.222	.54	5-2	.245	.60	6-2	.267	.66			
.126	.187	4-3	.285	.67	5-3	.307	.73	6-3	.330	.79	8-3	.375	.86
.188	.250	4-4	.347	.79	5-4	.370	.85	6-4	.392	.91	8-4	.437	.98
.251	.312	4-5	.410	.92	5-5	.432	.98	6-5	.455	1.04	8-5	.500	1.11
.313	.375	4-6	.472	1.04	5-6	.495	1.10	6-6	.517	1.16	8-6	.562	1.23
.376	.437	4-7	.535	1.17	5-7	.557	1.23	6-7	.580	1.29	8-7	.625	1.36
.438	.500	4-8	.597	1.29	5-8	.620	1.35	6-8	.642	1.41	8-8	.687	1.48
.501	.562	4-9	.660	1.42	5-9	.682	1.48	6-9	.705	1.54	8-9	.750	1.61
.563	.625	4-10	.772	1.54	5-10	.745	1.60	6-10	.767	1.66	8-10	.812	1.73
.626	.687	4-11	.785	1.67	5-11	.807	1.73	6-11	.830	1.66	8-11	.875	1.86
.688	.750	4-12	.847	1.79	5-12	.870	1.85	6-12	.892	1.66	8-12	.937	1.98
.751	.812	4-13	.910	1.92	5-13	.932	1.98	6-13	.955	2.04	8-13	1.000	2.11
.813	.875				5-14	.955	2.10	6-14		2.16	8-14	1.062	2.23
.876	.937										8-15	1.125	2.36
.938	1.000										8-16	1.187	2.48

Spencer Aircraft provides the information in this catalog for its customers as a ***reference only*** and it is not intended for design or guarantee of accuracy. Though it is our policy to ship all orders in a timely manner, Spencer Aircraft cannot guarantee that all items will be in stock at all times.

CHERRY RIVETS

PULL-THRU - UNIVERSAL HEAD

Cherry is a registered trademark of Cherry Aerospace Fasteners, a division of Textron, Inc.

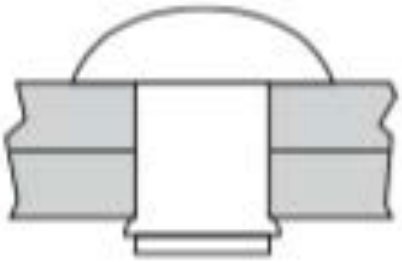

UNIVERSAL HEAD

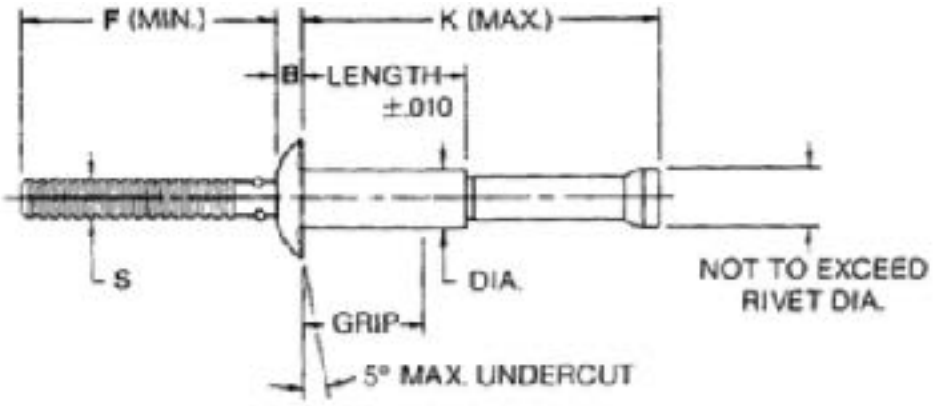

Series #	MATERIAL		UNIVERSAL HEAD		NOMINAL DIAMETER		3/32	1/8	5/32	3/16	1/4
	Rivet	Stem	Rivet	Stem	Diameter Dash #		-3	-4	-5	-6	-8
DIMENSIONS APPLICABLE TO ALL SERIES NUMBERS					S	± .003	.064	.086	.108	.127	.170
					F	(MIN.)	3/4	3/4	3/4	3/4	1
CR9117 (MS20600B)	2017-T4 Aluminum Alloy	Steel	MIL-A-8625 OR MIL-C-5541		DIA.	+ .003 - .001	3/32	1/8	5/32	3/16	1/4
					A		.187 ± .009	.250 ± .012	.312 ± .016	.375 ± .019	.500 ± .025
					B	+ .010 - .000	.040	.054	.067	.080	.107
CR9127 (MS20600AD)	5056 Aluminum Alloy		MIL-A-8625 OR MIL-C-5541 (ORANGE)		DIA.	+ .003 - .001	3/32	1/8	5/32	3/16	1/4
					A		.187 ± .009	.250 ± .012	.312 ± .016	.375 ± .019	.500 ± .025
					B	+ .010 - .000	.040	.054	.067	.080	.107
CR9129 OVERSIZE	2017-T4 Aluminum Alloy		MIL-A-8625 OR MIL-C-5541 (BLUE)		DIA.	+ .003 - .001		.134	.172	.203	.266
					A			.250 ± .012	.312 ± .016	.375 ± .019	.500 ± .025
					B	+ .010 - .000		.054	.067	.080	.107
CR9517P (MS20604MP)	Monel		CADMIUM PLATED TYPE II		DIA.	+ .003 - .001	3/32	1/8	5/32	3/16	1/4
CR9517 (MS20604M)					A		.187 ± .009	.250 ± .012	.312 ± .016	.375 ± .019	.500 ± .025
					B	+ .010 - .000	.040	.054	.067	.080	.107

GRIP		3/32			1/8			5/32			3/16			1/4		
Min	Max	Dash #	Length	K	Dash #	Length	K	Dash #	Length	K	Dash #	Length	K	Dash #	Length	K
^ .063	.062 .125	3-1 3-2	.130 .193	.20 .26	4-1 4-2	.160 .222	.21 .27	5-1 5-2	.182 .245	.24 .30	6-1 6-2	.205 .267	.27 .33			
.126 .188	.187 .250	3-3 3-4	.255 .318	.33 .39	4-3 4-4	.285 .347	.34 .40	5-3 5-4	.307 .370	.36 .42	6-3 6-4	.330 .392	.39 .45	8-3 8-4	.375 .437	.46 .52
.251 .313	.312 .375				4-5 4-6	.410 .472	.46 .52	5-5 5-6	.432 .495	.48 .55	6-5 6-6	.455 .517	.51 .58	8-5 8-6	.500 .562	.58 .65
.376 .438	.437 .500				4-7 4-8	.535 .597	.59 .65	5-7 5-8	.557 .620	.61 .67	6-7 6-8	.580 .642	.64 .70	8-7 8-8	.625 .687	.71 .77
.501 .563	.562 .625										6-9 6-10	.705 .767	.76 .83	8-9 8-10	.750 .812	.83 .90
.626 .688	.687 .750										6-11 6-12	.830 .892	.89 .95	8-11 8-12	.875 .937	.96 1.02
.751 .813	.812 .875										6-13 6-14	.955 1.017	1.01 1.08	8-13 8-14	1.000 1.062	1.08 1.15
														8-15 8-16	1.125 1.187	1.21 1.27

253-848-9349
SpencerAircraft.com

Spencer Aircraft provides the information in this catalog for its customers as a ***reference only*** and it is not intended for design or guarantee of accuracy. Though it is our policy to ship all orders in a timely manner, Spencer Aircraft cannot guarantee that all items will be in stock at all times.

CHERRY RIVETS

PULL-THRU - 100° FLUSH HEAD

Cherry is a registered trademark of Cherry Aerospace Fasteners, a division of Textron, Inc.

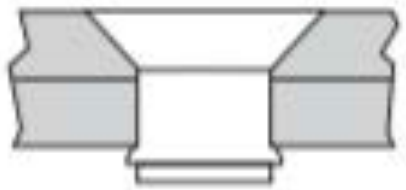

100°
FLUSH HEAD

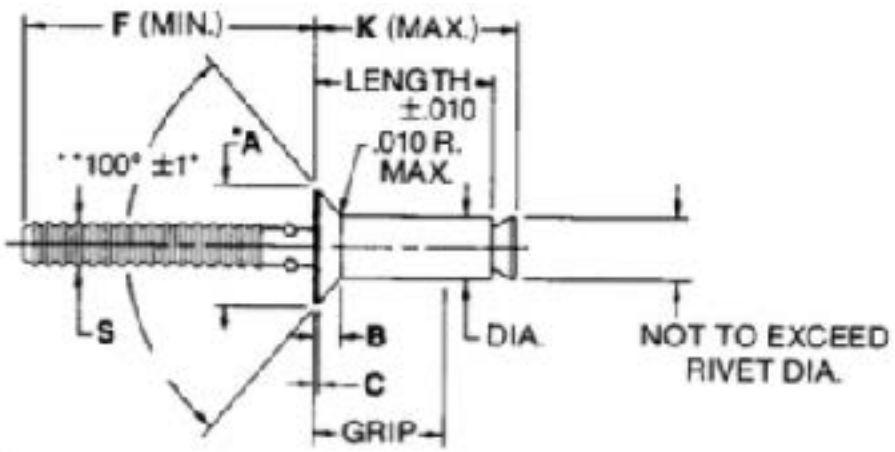

Series #	MATERIAL		UNIVERSAL HEAD		NOMINAL DIAMETER		3/32	1/8	5/32	3/16	1/4
	Rivet	Stem	Rivet	Stem	Diameter Dash #		-3	-4	-5	-6	-8
DIMENSIONS APPLICABLE TO ALL SERIES NUMBERS					S	± .003	.064	.086	.108	.127	.170
					F	(MIN.)	3/4	3/4	3/4	3/4	1
CR9116 (MS20605B)	2017-T4 Aluminum Alloy	Steel	MIL-A-8625 OR MIL-C-5541		DIA.	+ .003 - .001	3/32	1/8	5/32	3/16	1/4
					A	± .004	.179	.225	.266	.353	.476
					B	(REF.)	.036	.042	.055	.070	.095
					C	± .002			.004		
CR9126 (MS20605B)	5056 Aluminum Alloy		MIL-A-8625 OR MIL-C-5541 (ORANGE)		DIA.	+ .003 - .001	3/32	1/8	5/32	3/16	1/4
					A	± .004	.179	.225	.266	.353	.476
					B	(REF.)	.036	.042	.055	.070	.095
					C	± .002			.004		
CR9128 OVERSIZE	2017-T4 Aluminum Alloy		MIL-A-8625 OR MIL-C-5541 (BLUE)		DIA.	+ .003 - .001		.134	.172	.203	.266
					A	± .004		.225	.266	.353	.476
					B	(REF.)		.038	.049	.063	.089
					C	± .002			.004		
CR9516P (MS20605MP)	MONEL		CADMIUM PLATED TYPE II		DIA.	+ .003 - .001	3/32	1/8	5/32	3/16	1/4
					A	(REF.)	.179	.225	.266	.353	.476
CR9516 (MS20605M)					B	± .003	.040	.054	.067	.080	.107
					C	± .003			.010		

GRIP		3/32			1/8			5/32			3/16			1/4		
Min	Max	Dash #	Length	K	Dash #	Length	K	Dash #	Length	K	Dash #	Length	K	Dash #	Length	K
^ .063	.062 .125	3-1 3-2	.130 .193	.20 .26	4-1 4-2	.160 .222	.21 .27	5-2	.245	.30	6-2	.267	.33			
.126 .188	.187 .250	3-3 3-4	.255 .318	.33 .39	4-3 4-4	.285 .347	.34 .40	5-3 5-4	.307 .370	.36 .42	6-3 6-4	.330 .392	.39 .45	8-3 8-4	.375 .437	.46 .52
.251 .313	.312 .375				4-5 4-6	.410 .472	.46 .52	5-5 5-6	.432 .495	.48 .55	6-5 6-6	.455 .517	.51 .58	8-5 8-6	.500 .562	.58 .65
.376 .438	.437 .500				4-7 4-8	.535 .597	.59 .65	5-7 5-8	.557 .620	.61 .67	6-7 6-8	.580 .642	.64 .70	8-7 8-8	.625 .687	.71 .77
.501 .563	.562 .625										6-9 6-10	.705 .767	.76 .83	8-9 8-10	.750 .812	.83 .90
.626 .688	.687 .750										6-11 6-12	.830 .892	.89 .95	8-11 8-12	.875 .937	.96 1.02
.751 .813	.812 .875										6-13 6-14	.955 1.017	1.01 1.08	8-13 8-14	1.000 1.062	1.08 1.15
														8-15 8-16	1.125 1.187	1.21 1.27

Spencer Aircraft provides the information in this catalog for its customers as a ***reference only*** and it is not intended for design or guarantee of accuracy. Though it is our policy to ship all orders in a timely manner, Spencer Aircraft cannot guarantee that all items will be in stock at all times.

CHERRY RIVETS

LOCK

Cherry is a registered trademark of Cherry Aerospace Fasteners, a division of Textron, Inc.

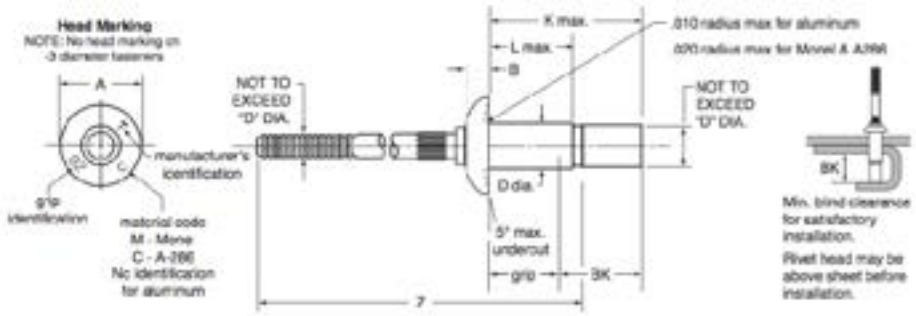

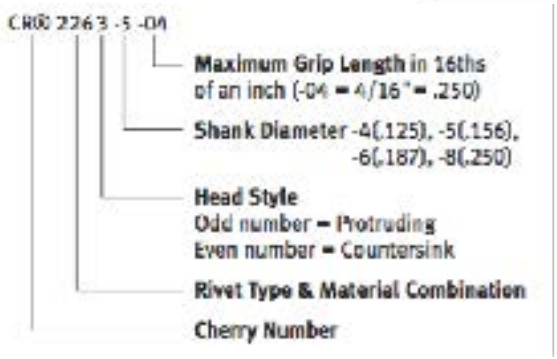

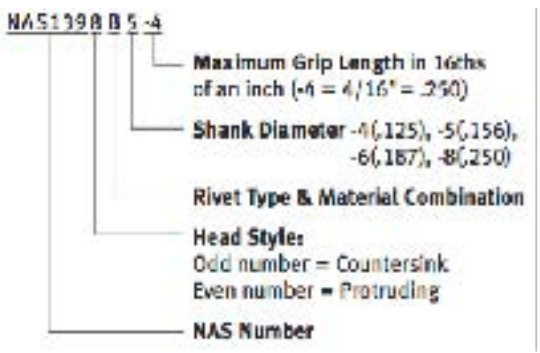

Materials		Ultimate Shear Strength (at room temp.)	Maximum Temperature (°F)
Sleeve	**Stem**		
5056 Aluminum	7075 Aluminum	30,000 PSI	250
2017 Aluminum	7075 Aluminum	38,000 PSI	250
Monel	Monel	75,000 PSI	900
A-286 CRES	A-286 CRES	75,000 PSI	1200
A-286 CRES	A-286 CRES	95,000 PSI **	1200

CherryLOCK Rivets			Single Shear					Tensile				
			3/32	**1/8**	**5/32**	**3/16**	**1/4**	**3/32**	**1/8**	**5/32**	**3/16**	**1/4**
COUNTERSUNK HEAD												
CR2162 **CR2164**	NAS1399D --	2017 Aluminum		494	755	1090	1970		230	375	540	1000
CR2262	NAS1399B	5056 Aluminum		388	596	862	1550		230	375	540	1000
CR2562	NAS1399M	Monel		710	1090	1580	2840		340	550	780	1450
CR2652 **CR2662** **CR2664**	-- NAS1399C --	A-286 CRES	543	970	970	2150	3890	300	640	1000	1500	2700
CR2642 **				1260	1960	2810	4965		640	1000	1500	2700

CherryLOCK Rivets			Single Shear					Tensile				
			3/32	**1/8**	**5/32**	**3/16**	**1/4**	**3/32**	**1/8**	**5/32**	**3/16**	**1/4**
UNIVERSAL HEAD												
CR2163	NAS1398D	2017 Aluminum		494	755	1090	1970		230	375	540	1000
CR2263	NAS1398B	5056 Aluminum		388	596	862	1550		230	375	540	1000
CR2563	NAS1398M	Monel		710	1090	1580	2840		340	550	780	1450
CR2563 **CR2663**	-- NAS1398C	A-286 CRES	543	970	970	2150	3890	300	640	1000	1500	2700
CR2643 **				1260	1960	2810	4965		640	1000	1500	2700

253-848-9349
SpencerAircraft.com

Spencer Aircraft provides the information in this catalog for its customers as a ***reference only*** and it is not intended for design or guarantee of accuracy. Though it is our policy to ship all orders in a timely manner, Spencer Aircraft cannot guarantee that all items will be in stock at all times.

CHERRY RIVETS

LOCK

Cherry is a registered trademark of Cherry Aerospace Fasteners, a division of Textron, Inc.

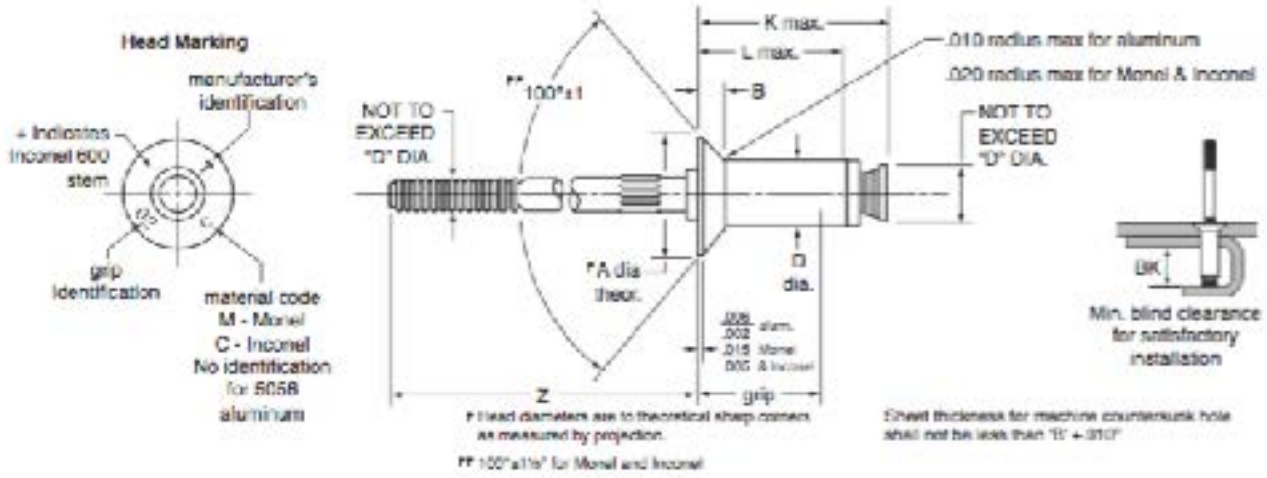

Diameter Dash #	Diameter +.003 -.001	A	B +.010 -.000	Z (REF) A GROUP	Z (REF) B GROUP	Z (REF) C GROUP
-3	.094	.187 ± .009	.040	1.78		
-4	.125	.250 ± .012	.054	1.79		
-5	.156	.312 ± .016	.067	1.81	2.06	
-6	.187	.375 ± .019	.080	1.85	2.10	
-8	.250	.500 ± .025	.107	1.97	2.22	2.47

Rivet Diameter	-01 Minimum Grip
3/32	.020
1/8	.025
5/32	.031
3/16	.037

* 3/32 Diameter rivets available in CR2662 & CR2663 only

** 95KSI fastener for use in high bearing strength materials such as steel, CRES, titanium, etc. NOT suitable in aluminum structures.

GRIP LIMITS

1/16 RANGE		3/32				1/8				5/32				3/16				1/4			
MIN	MAX	-#	L	K	BK	-#	L	K	BK	-#	L	K	BK	-#	L	K	BK	-#	L	K	BK
SEE TABLE	.062	3-01	.166	.33	.24	4-01	.198	.39	.30	5-01	.201	.38	.28	6-01	.225	.44	.27				
.063	.125	3-02	.229	.43	.28	4-02	.260	.51	.35	5-02	.263	.49	.34	6-02	.287	.55	.32	8-02	.323	.57	.37
.126	.187	3-03	.291	.53	.31	4-03	.323	.63	.41	5-03	.326	.61	.39	6-03	.350	.67	.37	8-03	.385	.69	.43
.188	.250	3-04	.354	.63	.35	4-04	.385	.75	.46	5-04	.388	.73	.45	6-04	.412	.79	.43	8-04	.446	.81	.48
.251	.312	3-05	.416	.73	.39	4-05	.448	.87	.52	5-05	.451	.85	.50	6-05	.475	.91	.48	8-05	.510	.93	.54
.313	.375	3-06	.479	.83	.42	4-06	.510	.98	.57	5-06	.513	.97	.56	6-06	.537	1.03	.54	8-06	.573	1.04	.60
.376	.437	3-07	.542	.97	.47	4-07	.573	1.11	.63	5-07	.576	1.09	.62	6-07	.600	1.15	.60	8-07	.635	1.16	.65
.438	.500	3-08	.605	1.11	.51	4-08	.635	1.23	.69	5-08	.638	1.20	.67	6-08	.662	1.27	.65	8-08	.698	1.28	.71
.501	.562									5-09	.701	1.38	.78	6-09	.725	1.44	.76	8-09	.760	1.46	.82
.563	.625									5-10	.763	1.50	.84	6-10	.787	1.56	.82	8-10	.823	1.58	.88
.626	.687													6-11	.850	1.68	.88	8-11	.885	1.70	.94
.688	.750													6-12	.912	1.81	.94	8-12	.948	1.83	1.00
.751	.812																	8-13	1.010	1.95	1.06
.813	.875																	8-14	1.073	2.07	1.12

Spencer Aircraft provides the information in this catalog for its customers as a ***reference only*** and it is not intended for design or guarantee of accuracy. Though it is our policy to ship all orders in a timely manner, Spencer Aircraft cannot guarantee that all items will be in stock at all times.

CHERRY RIVETS

NUT PLATE RIVETS - UNIVERSAL HEAD

Cherry is a registered trademark of Cherry Aerospace Fasteners, a division of Textron, Inc.

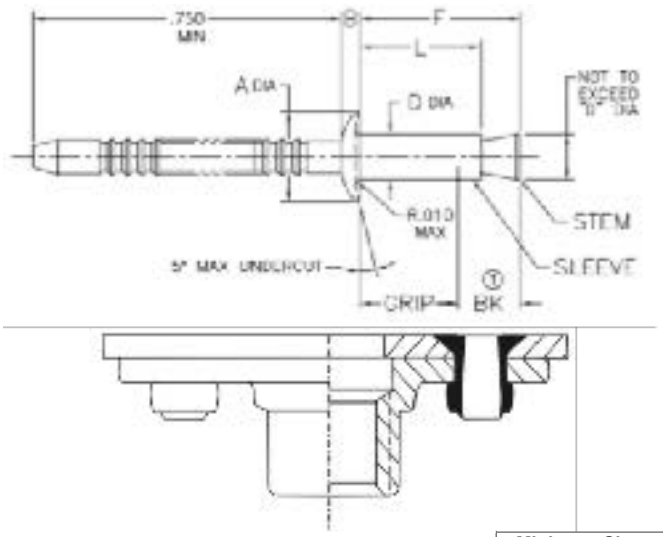

CCR 274 CS -4 -04 PR

- **Finish Code**
- **Grip Length** (maximum grip in 1/16 inch increments)
- **Diameter Dash Number** (in 1/32 inch increments)
- **Material Code**
- **Head Style**
- **Basic Part Number** (inch)

Rivet Material	Head Class	Minimum Shear (LBS.)		Minumum Tensile (LBS.)		Minimum Torque Out (IN LBS.)		Minimum Push Out (LBS.)	
		-3	-4	-3	-4	-3	-4	-3	-4
SS (1018 STEEL)	1 & 2	105	185	155	270	100	240	125	125
	3			100	225				
CS (A-286)	1 & 2			155	270				
	3								

STRENGTH VALVES - CCMR274 (CLASS 1)
CCMR 264 (CLASS 2), CCMR244 (CLASS 3)

Nominal Diameter Size	Minimum Shear Strength		Minimum Tensile Strength	
	Pounds	Newtons	Pounds	Newtons
-25	115	510	168	745
-30	166	735	242	1075
-35	225	1000	329	1460

NUT PLATE MATERIALS

Part #	CS		SS	
	Sleeve	Stem	Sleeve	Stem
CCR274 CCR264 CCR244 CCMR274 CCMR264 CCMR244	A-286 Per AMS 5731	305 Cres. Per ASTM A-493	C-1018 Steel Per ASTM A-510	Carbon Steel Per ASTM A-510

Diameter Dash #	A		B		D		BK	HOLE SIZE	
	Min	Max	Min	Max	Min	Max		Min	Max
-3	.178	.196	.040	.50	.092	.097	.140	.097	.101
-4	.238	.262	.054	.064	.123	.128	.170	.129	.132

GRIP	GRIP RANGE		-3 DIAMETER				-4 DIAMETER			
	Min	Max	"L" Max	"F" Max	Installed Weight per 1000 pieces		"L" Max	"F" Max	Installed Weight per 1000 pieces	
					KGS.	LBS.			KGS.	LBS.
-01	.015	.062	.140	.218	.100	.22	.170	.256	.390	.86
-02	.063	.125	.203	.281	.132	.29	.232	.318	.440	.97
-03	.126	.187	.265	.343	.163	.36	.295	.381	.480	1.08
-04	.188	.250	.328	.405	.195	.43	.357	.443	.540	1.19
-05	.251	.312	.390	.468	.227	.50	.420	.506	.590	1.30
-06	.313	.375	.453	.530	.259	.57	.482	.568	.640	1.41
-07	.376	.437	.515	.592	.290	.64	.544	.630	.689	1.52
-08	.438	.500	.578	.655	.322	.71	.607	.693	.739	1.63
-09	.501	.562	.640	.718	.353	.78	.670	.755	.789	1.74
-10	.563	.625	.703	.780	.385	.85	.732	.818	.839	1.85
-11	.626	.687	.765	.843	.417	.92	.795	.899	.889	1.96
-12	.688	.750	.828	.905	.449	.99	.857	.961	.938	2.07

253-848-9349
SpencerAircraft.com

Spencer Aircraft provides the information in this catalog for its customers as a ***reference only*** and it is not intended for design or guarantee of accuracy. Though it is our policy to ship all orders in a timely manner, Spencer Aircraft cannot guarantee that all items will be in stock at all times.

CHERRY RIVETS

NUT PLATE RIVETS - 100° FLUSH HEAD

Cherry is a registered trademark of Cherry Aerospace Fasteners, a division of Textron, Inc.

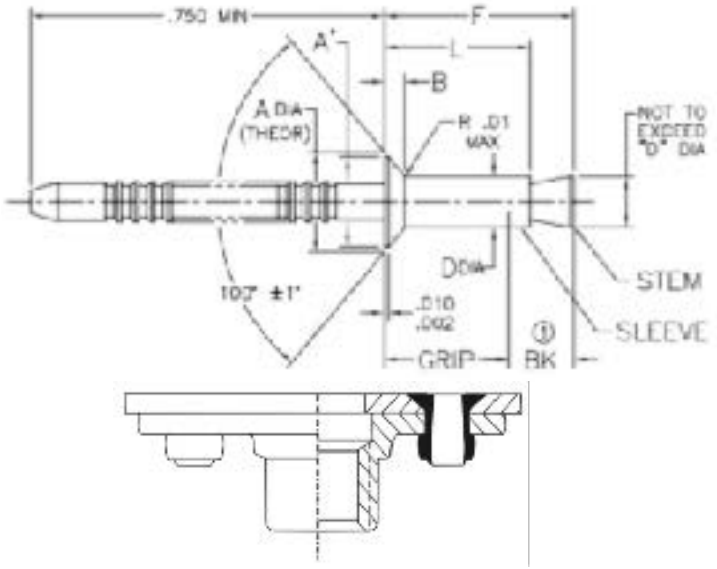

CCR 264 CS -4 -04 PR

- **Finish Code**
- **Grip Length** (maximum grip in 1/16 inch increments)
- **Diameter Dash Number** (in 1/32 inch increments)
- **Material Code**
- **Head Style**
- **Basic Part Number** (inch)

Rivet Material	Head Class	Minimum Shear (LBS.)		Minumum Tensile (LBS.)		Minimum Torque Out (IN LBS.)		Minimum Push Out (LBS.)	
		-3	-4	-3	-4	-3	-4	-3	-4
SS (1018 STEEL)	1 & 2	105	185	155	270	100	240	125	125
	3			100	225				
CS (A-286)	1 & 2			155	270				
	3								

STRENGTH VALVES - CCMR274 (CLASS 1)
CCMR 264 (CLASS 2), CCMR244 (CLASS 3)

Nominal Diameter Size	Minimum Shear Strength		Minimum Tensile Strength	
	Pounds	Newtons	Pounds	Newtons
-25	115	510	168	745
-30	166	735	242	1075
-35	225	1000	329	1460

NUT PLATE MATERIALS

Part #	CS		SS	
	Sleeve	Stem	Sleeve	Stem
CCR274 CCR264 CCR244 CCMR274 CCMR264 CCMR244	A-286 PER AMS 5731	305 CRES PER ASTM A-493	C-1018 STEEL PER ASTM A-510	CARBON STEEL PER ASTM A-510

Diameter Dash #	A		B	D		BK	HOLE SIZE	
	MIN.	MAX.	REF.	MIN.	MAX.		MIN.	MAX.
-3	.179	.151	.036	.092	.097	.140	.097	.101
-4	.225	.197	.042	.123	.128	.170	.129	.132

GRIP	GRIP RANGE		-3 DIAMETER				-4 DIAMETER			
	Min	Max	"L" Max	"F" Max	Installed Weight per 1000 pieces		"L" Max	"F" Max	Installed Weight per 1000 pieces	
					KGS.	LBS.			KGS.	LBS.
-01	.015	.062	.140	.218	.068	.15	.170	.256	.231	.51
-02	.063	.125	.203	.281	.100	.22	.232	.318	.281	.62
-03	.126	.187	.265	.343	.132	.29	.295	.381	.331	.73
-04	.188	.250	.328	.405	.163	.36	.357	.443	.381	.84
-05	.251	.312	.390	.468	.195	.43	.420	.506	.431	.95
-06	.313	.375	.453	.530	.227	.50	.482	.568	.476	1.05
-07	.376	.437	.515	.592	.259	.57	.544	.630	.526	1.16
-08	.438	.500	.578	.655	.290	.64	.607	.693	.576	1.27
-09	.501	.562	.640	.718			.670	.755		
-10	.563	.625	.703	.780			.732	.818		
-11	.626	.687	.765	.843			.795	.899		
-12	.688	.750	.828	.905			.857	.961		

Spencer Aircraft provides the information in this catalog for its customers as a ***reference only*** and it is not intended for design or guarantee of accuracy. Though it is our policy to ship all orders in a timely manner, Spencer Aircraft cannot guarantee that all items will be in stock at all times.

CHERRY RIVETS

NUT PLATE RIVETS - 100° FLUSH HEAD

Cherry is a registered trademark of Cherry Aerospace Fasteners, a division of Textron, Inc.

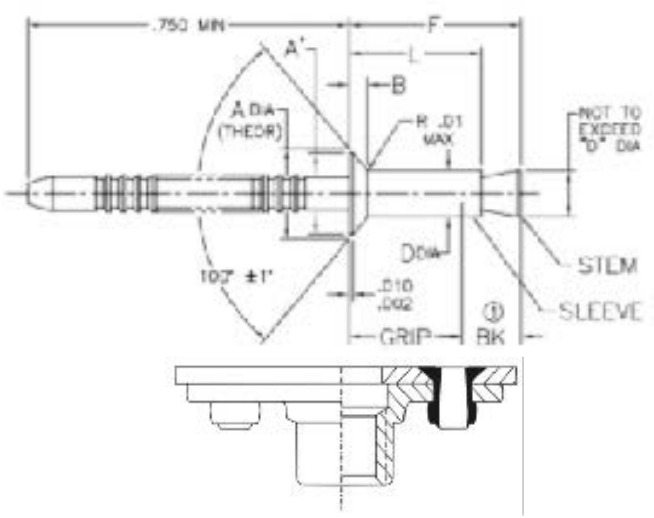

CCR 264 CS -4 -04 PR

- **Finish Code**
- **Grip Length** (maximum grip in 1/16 inch increments)
- **Diameter Dash Number** (in 1/32 inch increments)
- **Material Code**
- **Head Style**
- **Basic Part Number** (inch)

Rivet Material	Head Class	Minimum Shear (LBS.)		Minumum Tensile (LBS.)		Minimum Torque Out (IN LBS.)		Minimum Push Out (LBS.)	
		-3	-4	-3	-4	-3	-4	-3	-4
SS (1018 STEEL)	1 & 2	105	185	155	270	100	240	125	125
	3			100	225				
CS (A-286)	1 & 2			155	270				
	3								

STRENGTH VALVES - CCMR274 (CLASS 1)
CCMR 264 (CLASS 2), CCMR244 (CLASS 3)

Nominal Diameter Size	Minimum Shear Strength		Minimum Tensile Strength	
	Pounds	Newtons	Pounds	Newtons
-25	115	510	168	745
-30	166	735	242	1075
-35	225	1000	329	1460

NUT PLATE MATERIALS

Part #	CS		SS	
	Sleeve	Stem	Sleeve	Stem
CCR274 CCR264 CCR244 CCMR274 CCMR264 CCMR244	A-286 PER AMS 5731	305 CRES PER ASTM A-493	C-1018 STEEL PER ASTM A-510	CARBON STEEL PER ASTM A-510

Diameter Dash #	A		B	D		BK	HOLE SIZE	
	Min	Max	Ref	Min	Max		Min	Max
-3	.179	.151	.036	.092	.097	.140	.097	.101
-4	.225	.197	.042	.123	.128	.170	.129	.132

GRIP	GRIP RANGE		-3 DIAMETER				-4 DIAMETER			
	Min	Max	"L" Max	"F" Max	Installed Weight per 1000 pieces		"L" Max	"F" Max	Installed Weight per 1000 pieces	
					KGS.	LBS.			KGS.	LBS.
-01	.015	.062	.140	.218	.068	.15	.170	.256	.231	.51
-02	.063	.125	.203	.281	.100	.22	.232	.318	.281	.62
-03	.126	.187	.265	.343	.132	.29	.295	.381	.331	.73
-04	.188	.250	.328	.405	.163	.36	.357	.443	.381	.84
-05	.251	.312	.390	.468	.195	.43	.420	.506	.431	.95
-06	.313	.375	.453	.530	.227	.50	.482	.568	.476	1.05
-07	.376	.437	.515	.592	.259	.57	.544	.630	.526	1.16
-08	.438	.500	.578	.655	.290	.64	.607	.693	.576	1.27
-09	.501	.562	.640	.718			.670	.755		
-10	.563	.625	.703	.780			.732	.818		
-11	.626	.687	.765	.843			.795	.899		
-12	.688	.750	.828	.905			.857	.961		

253-848-9349
SpencerAircraft.com

Spencer Aircraft provides the information in this catalog for its customers as a ***reference only*** and it is not intended for design or guarantee of accuracy. Though it is our policy to ship all orders in a timely manner, Spencer Aircraft cannot guarantee that all items will be in stock at all times.

CHERRY RIVETS

NUT PLATE RIVETS - 100° REDUCED FLUSH HEAD

Cherry is a registered trademark of Cherry Aerospace Fasteners, a division of Textron, Inc.

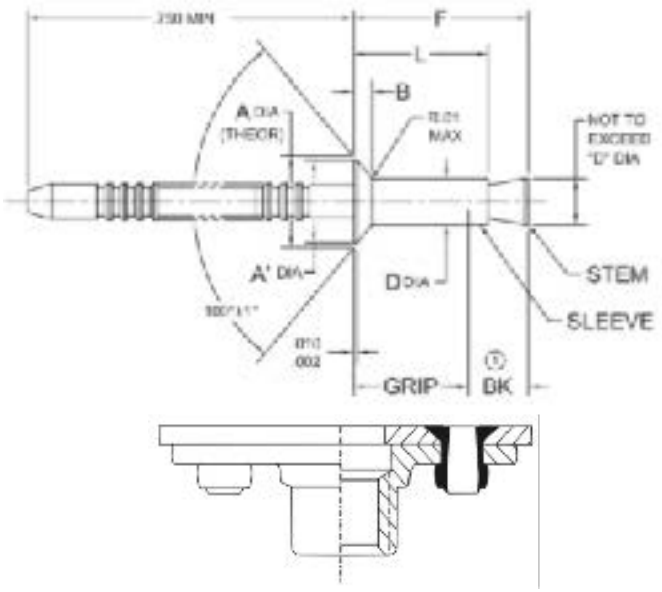

CCR 244 CS -4 -04 PR

- **Finish Code**
- **Grip Length** (maximum grip in 1/16 inch increments)
- **Diameter Dash Number** (in 1/32 inch increments)
- **Material Code**
- **Head Style**
- **Basic Part Number** (inch)

Rivet Material	Head Class	Minimum Shear (LBS.)		Minumum Tensile (LBS.)		Minimum Torque Out (IN LBS.)		Minimum Push Out (LBS.)	
		-3	-4	-3	-4	-3	-4	-3	-4
SS (1018 STEEL)	1 & 2	105	185	155	270	100	240	125	125
	3			100	225				
CS (A-286)	1 & 2			155	270				
	3								

STRENGTH VALVES - CCMR274 (CLASS 1)
CCMR 264 (CLASS 2), CCMR244 (CLASS 3)

Nominal Diameter Size	Minimum Shear Strength		Minimum Tensile Strength	
	Pounds	Newtons	Pounds	Newtons
-25	115	510	168	745
-30	166	735	242	1075
-35	225	1000	329	1460

NUT PLATE MATERIALS

Part #	CS		SS	
	Sleeve	Stem	Sleeve	Stem
CCR274 CCR264 CCR244 CCMR274 CCMR264 CCMR244	A-286 PER AMS 5731	305 CRES PER ASTM A-493	C-1018 STEEL PER ASTM A-510	CARBON STEEL PER ASTM A-510

Diameter Dash #	A		B	D		BK	HOLE SIZE	
	Min	Max	Ref	Min	Max		Min	Max
-3	.148	.126	.021	.092	.097	.140	.097	.101
-4	.196	.174	.028	.123	.128	.170	.129	.132

GRIP	GRIP RANGE		-3 DIAMETER				-4 DIAMETER			
	Min	Max	"L" Max	"F" Max	Installed Weight per 1000 pieces		"L" Max	"F" Max	Installed Weight per 1000 pieces	
					KGS.	LBS.			KGS.	LBS.
-01	.046	.062	.130	.250	.059	.13	.160	.343	.222	.49
-02	.063	.125	.193	.313	.091	.20	.222	.406	.272	.60
-03	.126	.187	.255	.375	.122	.27	.285	.468	.322	.71
-04	.188	.250	.318	.437	.154	.34	.347	.531	.372	.82
-05	.251	.312	.380	.500	.186	.41	.410	.593	.422	.93
-06	.313	.375	.443	.562	.218	.48	.472	.656	.472	1.04
-07	.376	.437	.505	.625	.249	.55	.535	.718	.517	1.14
-08	.438	.500	.578	.688	.281	.62	.597	.781	.567	1.25

Spencer Aircraft provides the information in this catalog for its customers as a ***reference only*** and it is not intended for design or guarantee of accuracy. Though it is our policy to ship all orders in a timely manner, Spencer Aircraft cannot guarantee that all items will be in stock at all times.

MS35265 & MS35266 SERIES

Fully Threaded - Cadmium II Plated - Slot Drive Screws

Drilled Head For Safety Wire

These are NON STRUCTURAL fasteners that replace the AN500A (coarse) & AN501A (fine) of like diameters & thread lengths

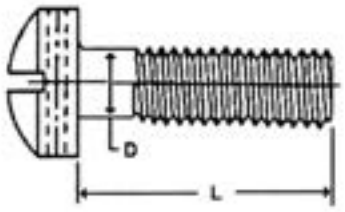

FILLISTER - DRILLED HEAD - SLOT DRIVE - LOW CARBON STEEL

	MS35265 - Coarse Thread								MS35266 - Fine Thread							
LENGTH	**2-56**	**4-40**	**6-32**	**8-32**	**10-24**	**1/2-20**	**5/16-18**	**3/8-16**	**2-64**	**4-48**	**6-40**	**8-36**	**10-32**	**1/4-28**	**5/16-24**	**3/8-24**
.12	1	11	24	39					1	11	24	39				
.19	2	12	25	40	58				2	12	25	40	58			
.25	3	13	26	41	59				3	13	26	41	59			
.31	4	14	27	42	60	76			4	14	27	42	60	76		
.38	5	15	28	43	61	77	92		5	15	28	43	61	77	92	
.44	6	16	29	44	62	78	93		6	16	29	44	62	78	93	
.50	7	17	30	45	63	79	94	107	7	17	30	45	63	79	94	107
.62	8	18	31	46	64	80	95	108	8	18	31	46	64	80	95	108
.75	9	19	32	47	65	81	96	109	9	19	32	47	65	81	96	109
.88	10	20	33	48	66	82	97	110	10	20	33	48	66	82	97	110
1.00		21	34	49	67	83	98	111		21	34	49	67	83	98	111
1.25		22	35	50	68	84	99	112		22	35	50	68	84	99	112
1.50		23	36	51	69	85	100	113		23	36	51	69	85	100	113
1.75			37	52	70	86	101	114			37	52	70	86	101	114
2.00			38	53	71	87	102	115			38	53	71	87	102	115
2.25				54	72	88	103	116				54	72	88	103	116
2.50				55	73	89	104	117				55	73	89	104	117
2.75				56	74	90	105	118				56	74	90	105	118
3				57	75	91	106	119				57	75	91	106	119

SCREW HEAD REFERENCES

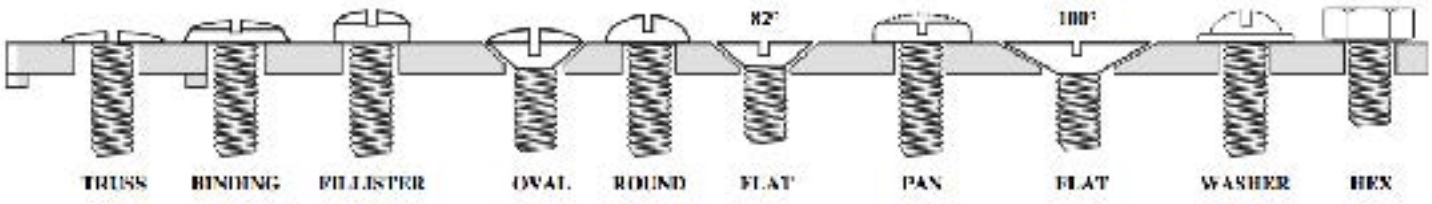

Cross-Check

DYKEM® Cross-Check™ provides a convenient visual method for identification of vibratory loosening or tampering in nuts, bolts, fasteners, and assemblies

DYKEM® Cross-Check™ Plus is a fast-cure torque sealant with proven resistance to Skydrol PE-5 fluid

CODE	CROSS CHECK INSPECTORS SEAL	
83417	**Cross Check Plus Inspector's Seal Skydrol Resistant - 1 OZ TUBE**	**YELLOW**
83420		**PINK**
83314	1 OZ TUBE	ORANGE
83315		GREEN
83316		RED
83317		YELLOW
83319		WHITE
83318		BLUE
83321		GRAY
83320		PINK



Spencer Aircraft provides the information in this catalog for its customers as a ***reference only*** and it is not intended for design or guarantee of accuracy. Though it is our policy to ship all orders in a timely manner, Spencer Aircraft cannot guarantee that all items will be in stock at all times.

PAN HEAD-BRASS

Fully Threaded - Black Oxide Finish - Phillips Drive Screws

Commonly used for mounting instruments

These are NON STRUCTURAL fasteners that replace the AN515B (coarse) & AN520B (fine) of like diameters & thread lengths

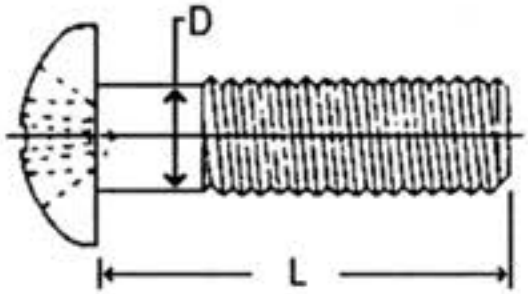

PAN HEAD - PHILLIPS RECESSED DRIVE - BRASS

	MS35214 - Coarse Thread								MS35215 - Fine Thread							
LENGTH	**2-56**	**4-40**	**6-32**	**8-32**	**10-24**	**1/2-20**	**5/16-18**	**3/8-16**	**2-64**	**4-48**	**6-40**	**8-36**	**10-32**	**1/4-28**	**5/16-24**	**3/8-24**
.12	1	10	21	36					1	10	21	36				
.19	2	11	22	37					2	11	22	37				
.25	3	12	23	38	51				3	12	23	38	51			
.31	4	13	24	39	52	66			4	13	24	39	52	66		
.38	5	14	25	40	53	67	80		5	14	25	40	53	67	80	
.44	6	15	26	41	54	68	81		6	15	26	41	54	68	81	
.50	7	16	27	42	55	69	82	93	7	16	27	42	55	69	82	93
.56	~~136~~	106	108	114	~~120~~	~~124~~	~~128~~	~~132~~								
.62	8	17	28	43	56	70	83	94	8	17	28	43	56	70	83	94
.75	9	18	29	44	57	71	84	95	9	18	29	44	57	71	84	95
.88		19	30	45	58	72	85	96		19	30	45	58	72	85	96
1.00		20	31	46	59	73	86	97		20	31	46	59	73	86	97
1.12		107	109	115	~~121~~	~~125~~	~~129~~	~~133~~								
1.25			32	47	60	74	87	98			32	47	60	74	87	98
1.38		~~137~~	110	116	~~122~~	~~126~~	~~130~~	~~134~~								
1.50			33	48	61	75	88	99			33	48	61	75	88	99
1.75			34	49	62	76	89	100			34	49	62	76	89	100
1.88			111	~~117~~	~~123~~	~~127~~	~~131~~	~~135~~								
2.00			35	50	63	77	90	101			35	50	63	77	90	101
2.25			112	~~118~~	64	78	91	102						78	91	102
2.50			113	~~119~~	65	79	92	103						79	92	103
2.75								104								104
3.00								105								105



Spencer Aircraft provides the information in this catalog for its customers as a ***reference only*** and it is not intended for design or guarantee of accuracy. Though it is our policy to ship all orders in a timely manner, Spencer Aircraft cannot guarantee that all items will be in stock at all times.

PAN HEAD-LOW CARBON STEEL

Fully Threaded - Cadmium II Plated - Phillips Drive Screws

These are NON STRUCTURAL fasteners that replace the AN515 (coarse) & AN520 (fine) of like diameters & thread lengths

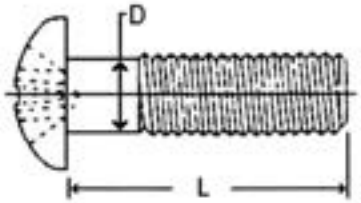

PAN HEAD - Phillips Recessed Drive - Cadmium II Plated

	MS35206 - Coarse Thread								MS35207 - Fine Thread							
LENGTH	**2-56**	**4-40**	**6-32**	**8-32**	**10-24**	**1/2-20**	**5/16-18**	**3/8-16**	**2-64**	**4-48**	**6-40**	**8-36**	**10-32**	**1/4-28**	**5/16-24**	**3/8-24**
.125	201	211	224	239					201	211	224	239				
.188	202	212	225	240	258				202	212	225	240	258			
.250	203	213	226	241	259				203	213	226	241	259			
.312	204	214	227	242	260	276			204	214	227	242	260	276		
.375	205	215	228	243	261	277	292		205	215	228	243	261	277	292	
.438	206	216	229	244	262	278	293		206	216	229	244	262	278	293	
.500	207	217	230	245	263	279	294	307	207	217	230	245	263	279	294	307
.562	320	323	327	331	337	343	349	355								
.625	208	218	231	246	264	280	295	308	208	218	231	246	264	280	295	308
.750	209	219	232	247	265	281	296	309	209	219	232	247	265	281	296	309
.875	210	220	233	248	266	282	297	310	210	220	233	248	266	282	297	310
1.000	321	221	234	249	267	283	298	311		221	234	249	267	283	298	311
1.125		324	328	332	338	344	350	356								
1.250		222	235	250	268	284	299	312		222	235	250	268	284	299	312
1.375		325	329	333	339	345	351	357								
1.500	322	223	236	251	269	285	300	313		223	236	251	269	285	300	313
1.750		326	237	252	270	286	301	314			237	251	270	286	301	314
1.875			361	334	340	346	352	358								
2.000			238	253	271	287	302	315			238	253	271	287	302	315
2.250			330	254	272	288	303	316				254	272	288	303	316
2.500			362	255	273	289	304	317				255	273	289	304	317
2.750				256	274	290	305	318				256	274	290	305	318
3.000				257	275	291	306	319				257	275	291	306	319
3.250				335	341	347	353	359								
3.500				336	342	348	354	360								

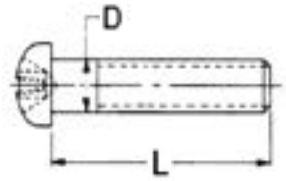

PAN HEAD - Phillips Recessed Drive - Cadmium II Plated

	MS35214 - Coarse Thread								MS35215 - Fine Thread							
LENGTH	**2-56**	**4-40**	**6-32**	**8-32**	**10-24**	**1/2-20**	**5/16-18**	**3/8-16**	**2-64**	**4-48**	**6-40**	**8-36**	**10-32**	**1/4-28**	**5/16-24**	**3/8-24**
.12	1	10	21	36					1	10	21	36				
.19	2	11	22	37					2	11	22	37				
.25	3	12	23	38	51				3	12	23	38	51			
.31	4	13	24	39	52	66			4	13	24	39	52	66		
.38	5	14	25	40	53	67	80		5	14	25	40	53	67	80	
.44	6	15	26	41	54	68	81		6	15	26	41	54	68	81	
.50	7	16	27	42	55	69	82	93	7	16	27	42	55	69	82	93
.56	~~136~~	106	108	114	~~120~~	~~124~~	~~128~~	~~132~~								
.62	8	17	28	43	56	70	83	94	8	17	28	43	56	70	83	94
.75	9	18	29	44	57	71	84	95	9	18	29	44	57	71	84	95
.88		19	30	45	58	72	85	96		19	30	45	58	72	85	96
1.00		20	31	46	59	73	86	97		20	31	46	59	73	86	97
1.12		107	109	115	~~121~~	~~125~~	~~129~~	~~133~~								
1.25			32	47	60	74	87	98			32	47	60	74	87	98
1.38		~~137~~	110	116	~~122~~	~~126~~	~~130~~	~~134~~								
1.50			33	48	61	75	88	99			33	48	61	75	88	99
1.75			34	49	62	76	89	100			34	49	62	76	89	100
1.88			111	~~117~~	~~123~~	~~127~~	~~131~~	~~135~~								
2.00			35	50	63	77	90	101			35	50	63	77	90	101
2.25			112	~~118~~	64	78	91	102					64	78	91	102
2.50			113	~~119~~	65	79	92	103					65	79	92	103
2.75								104								104
3.00								105								105

253-848-9349
SpencerAircraft.com

Spencer Aircraft provides the information in this catalog for its customers as a ***reference only*** and it is not intended for design or guarantee of accuracy. Though it is our policy to ship all orders in a timely manner, Spencer Aircraft cannot guarantee that all items will be in stock at all times.

MS27039 SERIES

Structural Pan Screws - Phillips Drive

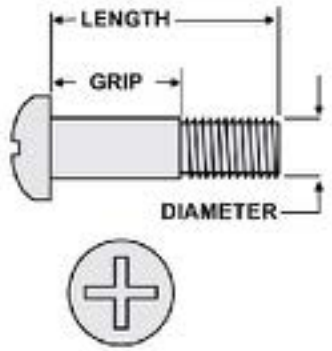

8-32			10-32			1/4-28			5/16-24			3/8-24			7/16-20			1/2-20		
Dash #	L	Grip	Dash #	L	Grip	Dash #	L	Grip	Dash #	L	Grip	Dash #	L	Grip	Dash #	L	Grip	Dash #	L	Grip
0804	.281		1-04	.281		4-04	.281													
0805	.344	1_/	1-5	.344	1_/	4-05	.344		5-05	.359		6-05	.406							
0806	.406		1-6	.406		4-06	.406	1_/	5-06	.422		6-06	.469		7-06	.453		8-06	.453	
0807	.469		1-7	.469		4-07	.469		5-07	.484	1_/	6-07	.531	1_/	7-07	.516		8-07	.516	
0808	.531	.094	1-8	.531	.062	4-08	.531		5-08	.547		6-08	.594		7-08	.578	1_/	8-08	.578	
0809	.594	.156	1-9	.594	.125	4-09	.594	.062	5-09	.609		6-09	.656		7-09	.641		8-09	.641	1_/
0810	.656	.219	1-10	.656	.188	4-10	.656	.125	5-10	.672	.094	6-10	.719		7-10	.703		8-10	.703	
0811	.719	.281	1-11	.719	.250	4-11	.719	.188	5-11	.734	.156	6-11	.781	.094	7-11	.766	.062	8-11	.766	
0812	.781	.344	1-12	.781	.312	4-12	.781	.250	5-12	.797	.219	6-12	.844	.156	7-12	.828	.125	8-12	.828	
0813	.844	.406	1-13	.844	.375	4-13	.844	.312	5-13	.859	.281	6-13	.906	.219	7-13	.891	.188	8-13	.891	.062
0814	.906	.469	1-14	.906	.438	4-14	.906	.375	5-14	.922	.344	6-14	.969	.281	7-14	.953	.250	8-14	.953	.125
0815	.969	.531	1-15	.969	.500	4-15	.969	.438	5-15	.984	.406	6-15	1.031	.344	7-15	1.016	.312	8-15	1.016	.188
0816	1.031	.594	1-16	1.031	.563	4-16	1.031	.500	5-16	1.047	.469	6-16	1.094	.406	7-16	1.078	.375	8-16	1.078	.250
0817	1.094	.656	1-17	1.094	.625	4-17	1.094	.563	5-17	1.109	.531	6-17	1.156	.469	7-17	1.141	.438	8-17	1.141	.312
0818	1.156	.719	1-18	1.156	.688	4-18	1.156	.625	5-18	1.172	.594	6-18	1.219	.531	7-18	1.203	.500	8-18	1.203	.375
0819	1.219	.781	1-19	1.219	.750	4-19	1.219	.688	5-19	1.234	.656	6-19	1.281	.594	7-19	1.266	.563	8-19	1.266	.438
0820	1.281	.844	1-20	1.281	.813	4-20	1.281	.750	5-20	1.297	.719	6-20	1.344	.656	7-20	1.328	.625	8-20	1.328	.500
0821	1.344	.906	1-21	1.344	.875	4-21	1.344	.813	5-21	1.359	.781	6-21	1.406	.719	7-21	1.391	.688	8-21	1.391	.563
0822	1.406	.969	1-22	1.406	.938	4-22	1.406	.875	5-22	1.422	.844	6-22	1.469	.781	7-22	1.453	.750	8-22	1.453	.625
0823	1.469	1.031	1-23	1.469	1.000	4-23	1.469	.938	5-23	1.484	.906	6-23	1.531	.844	7-23	1.516	.813	8-23	1.516	.688
0824	1.531	1.094	1-24	1.531	1.062	4-24	1.531	1.000	5-24	1.547	.969	6-24	1.594	.906	7-24	1.578	.875	8-24	1.578	.750
0825	1.594	1.156	1-25	1.594	1.125	4-25	1.594	1.062	5-25	1.609	1.031	6-25	1.656	.969	7-25	1.641	.938	8-25	1.641	.813
0826	1.656	1.219	1-26	1.656	1.188	4-26	1.656	1.125	5-26	1.672	1.094	6-26	1.719	1.031	7-26	1.703	1.000	8-26	1.703	.875
0827	1.719	1.281	1-27	1.719	1.250	4-27	1.719	1.188	5-27	1.734	1.156	6-27	1.781	1.094	7-27	1.766	1.062	8-27	1.766	.938
0828	1.781	1.344	1-28	1.781	1.312	4-28	1.781	1.250	5-28	1.797	1.219	6-28	1.844	1.156	7-28	1.828	1.125	8-28	1.828	1.000
0829	1.844	1.406	1-29	1.844	1.375	4-29	1.844	1.312	5-29	1.859	1.281	6-29	1.906	1.219	7-29	1.891	1.188	8-29	1.891	1.062
0830	1.906	1.469	1-30	1.906	1.438	4-30	1.906	1.375	5-30	1.922	1.344	6-30	1.969	1.281	7-30	1.953	1.250	8-30	1.953	1.125
0831	1.969	1.531	1-31	1.969	1.500	4-31	1.969	1.438	5-31	1.984	1.406	6-31	2.031	1.344	7-31	2.016	1.312	8-31	2.016	1.188
0832	2.031	1.594	1-32	2.031	1.563	4-32	2.031	1.500	5-32	2.047	1.469	6-32	2.094	1.406	7-32	2.078	1.375	8-32	2.078	1.250
0833	2.094	1.656	1-33	2.094	1.625	4-33	2.094	1.563	5-33	2.109	1.531	6-33	2.156	1.469	7-33	2.141	1.438	8-33	2.141	1.312
0834	2.156	1.719	1-34	2.156	1.688	4-34	2.156	1.625	5-34	2.172	1.594	6-34	2.219	1.531	7-34	2.203	1.500	8-34	2.203	1.375
0835	2.219	1.781	1-35	2.219	1.750	4-35	2.219	1.688	5-35	2.234	1.656	6-35	2.281	1.594	7-35	2.266	1.563	8-35	2.266	1.438
0836	2.281	1.844	1-36	2.281	1.813	4-36	2.281	1.750	5-36	2.297	1.719	6-36	2.344	1.656	7-36	2.328	1.625	8-36	2.328	1.500
0837	2.344	1.906	1-37	2.344	1.875	4-37	2.344	1.813	5-37	2.359	1.781	6-37	2.406	1.719	7-37	2.391	1.688	8-37	2.391	1.563
0838	2.406	1.969	1-38	2.406	1.938	4-38	2.406	1.875	5-38	2.422	1.844	6-38	2.469	1.781	7-38	2.453	1.750	8-38	2.453	1.625
			1-39	2.469	2.000	4-39	2.469	1.938	5-39	2.484	1.906	6-39	2.531	1.844	7-39	2.516	1.813	8-39	2.516	1.688
			1-40	2.531	2.062	4-40	2.531	2.000	5-40	2.547	1.969	6-40	2.594	1.906	7-40	2.578	1.875	8-40	2.578	1.750
			1-41	2.594	2.125	4-41	2.594	2.062	5-41	2.609	2.031	6-41	2.656	1.969	7-41	2.641	1.938	8-41	2.641	1.813
			1-42	2.656	2.188	4-42	2.656	2.125	5-42	2.672	2.094	6-42	2.719	2.031	7-42	2.703	2.000	8-42	2.703	1.875
			1-43	2.719	2.250	4-43	2.719	2.188	5-43	2.734	2.156	6-43	2.781	2.094	7-43	2.766	2.062	8-43	2.766	1.938
			1-44	2.781	2.312	4-44	2.781	2.250	5-44	2.797	2.219	6-44	2.844	2.156	7-44	2.828	2.125	8-44	2.828	2.000
			1-45	2.844	2.375	4-45	2.844	2.312	5-45	2.859	2.281	6-45	2.906	2.219	7-45	2.891	2.188	8-45	2.891	2.062
			1-46	2.906	2.438	4-46	2.906	2.375	5-46	2.922	2.344	6-46	2.969	2.281	7-46	2.953	2.250	8-46	2.953	2.125
			1-47	2.969	2.500	4-47	2.969	2.438	5-47	2.984	2.406	6-47	3.031	2.344	7-47	3.016	2.312	8-47	3.016	2.188
			1-48	3.031	2.563	4-48	3.031	2.500	5-48	3.047	2.469	6-48	3.094	2.406	7-48	3.078	2.375	8-48	3.078	2.250
			1-49	3.094	2.626															
			1-50	3.156	2.688															
			1-51	3.219	2.751															
			1-52	3.281	2.813															
			1-53	3.344	2.876															
			1-54	3.406	2.938															
			1-55	3.469	3.000															
			1-56	3.531	3.063															

Spencer Aircraft provides the information in this catalog for its customers as a ***reference only*** and it is not intended for design or guarantee of accuracy. Though it is our policy to ship all orders in a timely manner, Spencer Aircraft cannot guarantee that all items will be in stock at all times.

MS24693 SERIES

Fully Threaded - 100 Degree Countersunk - Non Structural Screws-Phillips Drive

These are NON STRUCTURAL fasteners that replace the AN507 Series

Use the MS24693 Series to replace AN507 screws of like material and finish.

PLEASE SEE THE CHARTS for desired size numbers.

SEE THE CROSS CHART REFERENCE CHART for superseding part numbers.

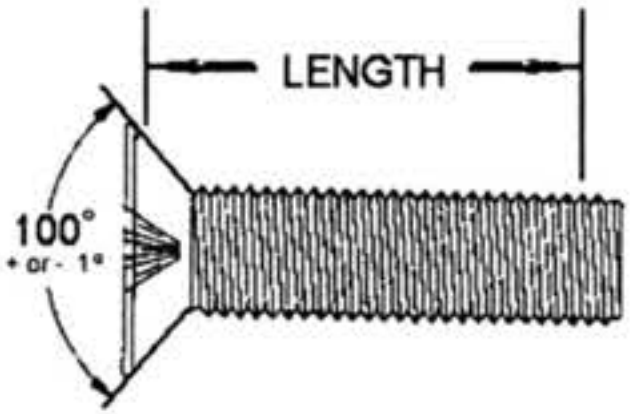

HELP WITH THE SELECTION OF PART NUMBERS:

Use S after MS24693 and before the size number for Low Carbon Steel Cadmium II Plated.
Use C after MS24693 and before the size number for 300 series Stainless Steel, Un-Plated.
Use BB after MS24693 and before the size number for brass with Black Chemical Finish.

EXAMPLES OF PART NUMBERS:

MS24693S28 = 6-32 threads	1/2 OAL including the head	Cadmium II Plated Steel
MS24693BB51 = 8-32 threads	5/8 OAL including the head	Black Chemical Finish Brass
MS24693C272 = 10-32 threads	1/2 OAL including the head	UN-Plated 300 Series Stainless

LENGTH	2-56	4-40	6-32	8-32	10-24	1/2-20	5/16-18	3/8-16	2-64	4-48	6-40	8-36	10-32	1/4-28	5/16-24	3/8-24
.093	15								217							
.125	16								218							
.156	17								219							
.187		1	23						420	201						
.250		2	24	46					421	202	224	246	268			
.312		3	25	47	69	91			422	203	225	247	269			
.375		4	26	48	70	92			423	204	226	248	270	292		
.437		5	27	49	71	93			424	205	227	249	271	293		
.500		6	28	50	72	94	116	138	425	206	228	250	272	294	316	338
.625		7	29	51	73	95	117	139		207	229	251	273	295	317	39
.750		8	30	52	74	96	118	140		208	230	252	274	296	318	340
.875		9	31	53	75	97	119	141		209	231	253	275	297	319	341
1.000		10	32	54	76	98	120	142		210	232	254	276	298	320	342
1.125		11	33	55	77	99	121	143		211	233	255	277	299	321	343
1.250		12	34	56	78	100	122	144		212	234	256	278	300	322	344
1.375										213	235	257	279	301		
1.500		14	36	58	80	102	124	146		214	236	258	280	302	324	346
1.625										215	237	259	281	303		
1.750			38	60	82	104	126	148		216	238	260	282	304	326	348
1.875											239	261	283	305		
2.000			40	62	84	106	128	150			240	262	284	306	328	350
2.250											241	263	285	307		
2.500			42	64	86	108	130	152			242	264	286	308	330	352
2.750												265	287	309		
3.000				66	88	110	132	154				266	288	310	332	354

253-848-9349
SpencerAircraft.com

Spencer Aircraft provides the information in this catalog for its customers as a ***reference only*** and it is not intended for design or guarantee of accuracy. Though it is our policy to ship all orders in a timely manner, Spencer Aircraft cannot guarantee that all items will be in stock at all times.

CROSS REFERENCE CHART

AN507 TO MS24693 Screws

AN507 Dash No.	MS24693 Size Number	AN507 Dash No.	MS24693 Size Number	AN507 Dash No.	MS24693 Size Number	AN507 Dash No.	MS24693 Size Number
440R4	2	632R31	no replacement	1024R22	no replacement	420R13	no replacement
440R5	3	632R32	40	1024R23	no replacement	420R14	97
440R6	4	832R4	46	1024R24	80	420R15	no replacement
440R7	5	832R5	47	1024R25	no replacement	420R16	98
440R8	6	832R6	48	1024R26	no replacement	420R17	no replacement
440R9	no replacement	832R7	49	1024R27	no replacement	420R18	99
440R10	7	832R8	50	1024R28	82	420R19	no replacement
440R11	no replacement	832R9	no replacement	1024R29	no replacement	420R20	100
440R12	8	832R10	51	1024R30	no replacement	420R21	no replacement
440R13	no replacement	832R11	no replacement	1024R31	no replacement	420R22	101
440R14	9	832R12	52	1024R32	84	420R23	no replacement
440R15	no replacement	832R13	no replacement	1032R4	268	420R24	102
440R16	10	832R14	53	1032R5	269	420R25	no replacement
440R17	no replacement	832R15	no replacement	1032R6	270	420R26	no replacement
440R18	11	832R16	54	1032R7	271	420R27	no replacement
440R19	no replacement	832R17	no replacement	1032R8	272	420R28	104
440R20	12	832R18	55	1032R9	no replacement	420R29	no replacement
440R21	no replacement	832R19	no replacement	1032R10	273	420R30	no replacement
440R22	no replacement	832R20	56	1032R11	no replacement	420R31	no replacement
440R23	no replacement	832R21	no replacement	1032R12	274	420R32	106
440R24	14	832R22	no replacement	1032R13	no replacement	428R4	no replacement
632R3	23	832R23	no replacement	1032R14	275	428R5	no replacement
632R4	24	832R24	58	1032R15	no replacement	428R6	292
632R5	25	832R25	no replacement	1032R16	276	428R7	293
632R6	26	832R26	no replacement	1032R17	no replacement	428R8	294
632R7	27	832R27	no replacement	1032R18	277	428R9	no replacement
632R8	28	832R28	60	1032R19	no replacement	428R10	295
632R9	no replacement	832R29	no replacement	1032R20	278	428R11	no replacement
632R10	29	832R30	no replacement	1032R21	no replacement	428R12	296
632R11	no replacement	832R31	no replacement	1032R22	279	428R13	no replacement
632R12	30	832R32	62	1032R23	no replacement	428R14	297
632R13	no replacement	1024R4	no replacement	1032R24	280	428R15	no replacement
632R14	31	1024R5	69	1032R25	no replacement	428R16	298
632R15	no replacement	1024R6	70	1032R26	281	428R17	no replacement
632R16	32	1024R7	71	1032R27	no replacement	428R18	299
632R17	no replacement	1024R8	72	1032R28	282	428R19	no replacement
632R18	33	1024R9	no replacement	1032R29	no replacement	428R20	300
632R19	no replacement	1024R10	73	1032R30	283	428R21	no replacement
632R20	34	1024R11	no replacement	1032R31	no replacement	428R22	301
632R21	no replacement	1024R12	74	1032R32	284	428R23	no replacement
632R22	no replacement	1024R13	no replacement	420R4	no replacement	428R24	302
632R23	no replacement	1024R14	75	420R5	91	428R25	no replacement
632R24	36	1024R15	no replacement	420R6	92	428R26	303
632R25	no replacement	1024R16	76	420R7	93	428R27	no replacement
632R26	no replacement	1024R17	no replacement	420R8	94	428R28	304
632R27	no replacement	1024R18	77	420R9	no replacement	428R29	no replacement
632R28	38	1024R19	no replacement	420R10	95	428R30	305
632R29	no replacement	1024R20	78	420R11	no replacement	428R31	no replacement
632R30	no replacement	1024R21	no replacement	420R12	96	428R32	306

Spencer Aircraft provides the information in this catalog for its customers as a ***reference only*** and it is not intended for design or guarantee of accuracy. Though it is our policy to ship all orders in a timely manner, Spencer Aircraft cannot guarantee that all items will be in stock at all times.

MS24694 SERIES

100 Degree Countersunk - Structural Screws - Phillips Drive

These are STRUCTURAL fasteners that replace the AN509 Series

Use the MS24694 Series to replace AN509 screws of like material & finish. See the chart below for desired size numbers.
Refer to the CROSS REFERENCE CHART on the following page for superseding part numbers.

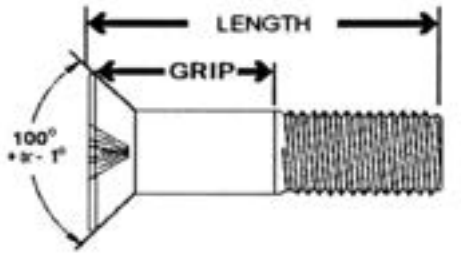

TENSILE STRENGTH	125,000 to 145,000 PSI	Alloy Steel	one "X" on head
TENSILE STRENGTH	85,000 PSI	Stainless Steel	one dash on head

HELP WITH THE SELECTION OF PART NUMBERS:

Use (S) after MS24694 & before the size number for Alloy Steel, Cadmium II Plated.
Use (C) after MS24694 & before the size number for 300 Series Stainless Steel, Non-Plated.

EXAMPLES OF PART NUMBERS:

MS24694S50	= 10-32 threads	17/32 OAL including the head, Grip 7/64	Steel, Cadmium II Plated
MS24694C101	= 1/4-24 threads	29/32 OAL including the head, Grip 11/32	300 Series Stainless, Un-Plated

L	8-32		10-32		1/4-28		5/16-24	
	Grip	Dash #	Grip	Dash #	Grip	Dash #	Grip	Dash #
9/32		1		46				
11/32		2		47		92		137
13/32	3/32	3	7/64	48		93		138
15/32		4		49	9/64	94		139
17/32		5		50		95	11/64	140
19/32	5/32	6		51		96		141
21/32	7/32	7	3/16	52		97		142
23/32	9/32	8	1/4	53	3/16	98		143
25/32	11/32	9	5/16	54	1/4	99	7/32	144
27/32	13/32	10	3/8	55	5/16	100	9/32	145
29/32	15/32	11	7/16	56	3/8	101	11/32	146
31/32	17/32	12	1/2	57	7/16	102	13/32	147
1-1/32	19/32	13	9/16	58	1/2	103	15/32	148
1-3/32	21/32	14	5/8	59	9/16	104	17/32	149
1-5/32	23/32	15	11/16	60	5/8	105	19/32	150
1-7/32	25/32	16	3/4	61	11/16	106	21/32	151
1-9/32	27/32	17	13/16	62	3/4	107	23/32	152
1-11/32	29/32	18	7/8	63	13/16	108	25/32	153
1-13/32	31/32	19	15/16	64	7/8	109	27/32	154
1-15/32	1-1/32	20	1	65	15/16	110	29/32	155
1-17/32	1-3/32	21	1-1/16	66	1	111	31/32	156
1-19/32	1-5/32	22	1-1/8	67	1-1/16	112	1-1/32	157
1-21/32	1-7/32	23	1-3/16	68	1-1/8	113	1-3/32	158
1-23/32	1-9/32	24	1-1/4	69	1-3/16	114	1-5/32	159
1-25/32	1-11/32	25	1-5/16	70	1-1/4	115	1-7/32	160
1-27/32	1-13/32	26	1-3/8	71	1-5/16	116	1-9/32	161
1-29/32	1-15/32	27	1-7/16	72	1-3/8	117	1-11/32	162
1-31/32	1-17/32	28	1-1/2	73	1-7/16	118	1-13/32	163
2-1/32	1-19/32	29	1-9/16	74	1-1/2	119	1-15/32	164
2-3/32	1-21/32	30	1-5/8	75	1-9/16	120	1-17/32	165
2-5/32	1-23/32	31	1-11/16	76	1-5/8	121	1-19/32	166
2-7/32	1-25/32	32	1-3/4	77	1-11/16	122	1-21/32	167
2-9/32	1-27/32	33	1-13/16	78	1-3/4	123	1-23/32	168
2-11/32	1-29/32	34	1-7/8	79	1-13/16	124	1-25/32	169
2-13/32	1-31/32	35	1-15/16	80	1-7/8	125	1-27/32	170
2-15/32			2	81	1-15/16	126	1-29/32	171
2-17/32			2-1/16	82	2	127	1-31/32	172
2-19/32			2-1/8	83	2-1/16	128	2-1/32	173
2-21/32			2-3/16	84	2-1/8	129	2-3/32	174
2-23/32			2-1/4	85	2-3/16	130	2-5/32	175
2-25/32			2-5/16	86	2-1/4	131	2-7/32	176
2-27/32			2-3/8	87	2-5/16	132	2-9/32	177
2-29/32			2-7/16	88	2-3/8	133	2-11/32	178
2-31/32			2-1/2	89	2-7/16	134	2-13/32	179
3-1/32			2-9/16	90	2-1/2	135	2-15/32	180

L	3/8-24		7/16-20		1/2-20		9/16-18	
	Grip	Dash #	Grip	Dash #	Grip	Dash #	Grip	Dash #
13/32		181						
15/32		182		225		270		
17/32		183		226		271		330
19/32	3/16	184		227		272		331
21/32		185	7/32	228		273		332
23/32		186		229		274		333
25/32		187		230	1/4	275		334
27/32		188		231		276	9/32	335
29/32	7/32	189		232		277		336
31/32	9/32	190	1/4	233		278		337
1-1/32	11/32	191	5/16	234		279		338
1-3/32	13/32	192	3/8	235		280		339
1-5/32	15/32	193	7/16	236	5/16	281		340
1-7/32	17/32	194	1/2	237	3/8	282		341
1-9/32	19/32	195	9/16	238	7/16	283	11/32	342
1-11/32	21/32	196	5/8	239	1/2	284	13/32	343
1-13/32	23/32	197	11/16	240	9/16	285	15/32	344
1-15/32	25/32	198	3/4	241	5/8	286	17/32	345
1-17/32	27/32	199	13/16	242	11/16	287	19/32	346
1-19/32	29/32	200	7/8	243	3/4	288	21/32	347
1-21/32	31/32	201	15/16	244	13/16	289	23/32	348
1-23/32	1-1/32	202	1	245	7/8	290	25/32	349
1-25/32	1-3/32	203	1-1/16	246	15/16	291	27/32	350
1-27/32	1-5/32	204	1-1/8	247	1	292	29/32	351
1-29/32	1-7/32	205	1-3/16	248	1-1/16	293	31/32	352
1-31/32	1-9/32	206	1-1/4	249	1-1/8	294	1-1/32	353
2-1/32	1-11/32	207	1-5/16	250	1-3/16	295	1-3/32	354
2-3/32	1-13/32	208	1-3/8	251	1-1/4	296	1-5/32	355
2-5/32	1-15/32	209	1-7/16	252	1-5/16	297	1-7/32	356
2-7/32	1-17/32	210	1-1/2	253	1-3/8	298	1-9/32	357
2-9/32	1-19/32	211	1-9/16	254	1-7/16	299	1-11/32	358
2-11/32	1-21/32	212	1-5/8	255	1-1/2	300	1-13/32	359
2-13/32	1-23/32	213	1-11/16	256	1-9/16	301	1-15/32	360
2-15/32	1-25/32	214	1-3/4	257	1-5/8	302	1-17/32	361
2-17/32	1-27/32	215	1-13/16	258	1-11/16	303	1-19/32	362
2-19/32	1-29/32	216	1-7/8	259	1-3/4	304	1-21/32	363
2-21/32	1-31/32	217	1-15/16	260	1-13/16	305	1-23/32	364
2-23/32	2-1/32	218	2	261	1-7/8	306	1-25/32	365
2-25/32	2-3/32	219	2-1/16	262	1-15/16	307	1-27/32	366
2-27/32	2-5/32	220	2-1/8	263	2	308	1-29/32	367
2-29/32	2-7/32	221	2-3/16	264	2-1/16	309	1-31/32	368
2-31/32	2-9/32	222	2-1/4	265	2-1/8	310	2-1/32	369
3-1/32	2-11/32	223	2-5/16	266	2-3/16	311	2-3/32	370
3-3/32	2-13/32	224	2-3/8	267	2-1/4	312	2-5/32	371
3-5/32					2-5/16	313	2-7/32	372
3-7/32					2-3/8	314	2-9/32	373
3-9/32					2-7/16	315	2-11/32	374
3-11/32					2-1/2	316	2-13/32	375
3-13/32					2-9/16	317	2-15/32	376
3-15/32					2-5/8	318	2-17/32	377
3-17/32					2-11/16	319	2-19/32	378
3-19/32					2-3/4	320	2-21/32	379
3-21/32					2-13/16	321	2-23/32	380
3-23/32					2-7/8	322	2-25/32	381
3-25/32					2-15/16	323	2-27/32	382
3-27/32					3	324	2-29/32	383
3-29/32					3-1/16	325	2-31/32	384
3-31/32					3-1/8	326	3-1/32	385
4-1/32					3-3/16	327	3-3/32	386
4-3/32					3-1/4	328	3-5/32	387

MACHINE SCREW KITS AVAILABLE!!!

253-848-9349
SpencerAircraft.com

Spencer Aircraft provides the information in this catalog for its customers as a ***reference only*** and it is not intended for design or guarantee of accuracy. Though it is our policy to ship all orders in a timely manner, Spencer Aircraft cannot guarantee that all items will be in stock at all times.

CROSS REFERENCE CHART

AN509 to MS24694 Screws

AN509	MS24694	AN509	MS24694	AN509	MS24694
832R4	**1**	1032R4	**46**	416R4	**NOT AVAILABLE**
832R5	**2**	1032R5	**47**	416R5	**92**
832R6	**3**	1032R6	**48**	416R6	**93**
832R7	**4**	1032R7	**49**	416R7	**94**
832R8	**5**	1032R8	**50**	416R8	**95**
832R9	**6**	1032R9	**51**	416R9	**96**
832R10	**7**	1032R10	**52**	416R10	**97**
832R11	**8**	1032R11	**53**	416R11	**98**
832R12	**9**	1032R12	**54**	416R12	**99**
832R13	**10**	1032R13	**55**	416R13	**100**
832R14	**11**	1032R14	**56**	416R14	**101**
832R15	**12**	1032R15	**57**	416R15	**102**
832R16	**13**	1032R16	**58**	416R16	**103**
832R17	**14**	1032R17	**59**	416R17	**104**
832R18	**15**	1032R18	**60**	416R18	**105**
832R19	**16**	1032R19	**61**	416R19	**106**
832R20	**17**	1032R20	**62**	416R20	**107**
832R21	**18**	1032R21	**63**	416R21	**108**
832R22	**19**	1032R22	**64**	416R22	**109**
832R23	**20**	1032R23	**65**	416R23	**110**
832R24	**21**	1032R24	**66**	416R24	**111**
832R25	**22**	1032R25	**67**	416R25	**112**
832R26	**23**	1032R26	**68**	416R26	**113**
832R28	**24**	1032R27	**69**	416R27	**114**
832R29	**25**	1032R28	**70**	416R28	**115**
832R30	**26**	1032R29	**71**	416R29	**116**
832R31	**27**	1032R30	**72**	416R30	**117**
832R32	**28**	1032R31	**73**	416R31	**118**
832R33	**29**	1032R32	**74**	416R32	**119**



Spencer Aircraft provides the information in this catalog for its customers as a ***reference only*** and it is not intended for design or guarantee of accuracy. Though it is our policy to ship all orders in a timely manner, Spencer Aircraft cannot guarantee that all items will be in stock at all times.

AN525 SERIES

Washer Head - Structural Screws - Phillips Drive - Alloy Steel

TENSILE STRENGTH: 125,000 to PSI (minimum) one "X" on head Plated Cadmium II or Zinc II (both gold in appearance)

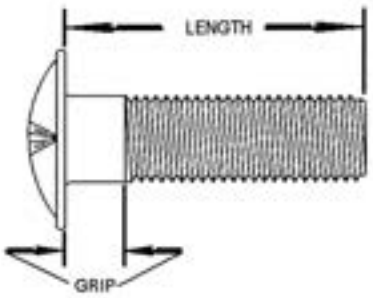

LENGTH	GRIP	8-32 Part #	10-32 Part #	1/4-28 Part #
3/8	1/32	832R6	10R6	416R6
7/16	1/16	832R7	10R7	416R7
1/2	1/8	832R8	10R8	416R8
9/16	5/32	832R9	10R9	416R9
5/8	7/32	832R10	10R10	416R10
11/16	9/32	832R11	10R11	416R11
3/4	11/32	832R12	10R12	416R12
13/16	13/32	832R13	10R13	416R13
7/8	15/32	832R14	10R14	416R14
15/16	17/32	832R15	10R15	416R15
1	19/32	832R16	10R16	416R16
1-1/8	23/32	832R18	10R18	416R18
1-1/4	27/32	832R20	10R20	416R20
1-3/8	31/32	832R22	10R22	416R22
1-1/2	1-3/32	832R24	10R24	416R24
1-5/8	1-7/32	832R26	10R26	416R26
1-3/4	1-11/32	832R28	10R28	416R28
1-7/8	1-15/32	832R30	10R30	416R30
2	1-19/32	832R32	10R32	416R32

AN526 SERIES

Non-Structural Truss Head

Carbon Steel or Stainless

Tensile Strength 60,000 PSI (Carbon Steel with Cadmium II Plating)
Tensile Strength 60,000 PSI (Stainless Steel)

These screws are commonly used for general purpose NON-STRUCTURAL fastening.
The United States Government, effective 9.1.65, considers then to be obsolete for design or replacement.
Due to popular consumer demand, they are still made and sold in quantity.
Cadmium I plating is silver in appearance.

EXAMPLES OF PART NUMBERS:

AN526-1032R12 = 10-32 threads	3/4 OAL (under the truss head) Phillips drive	Carbon Steel Cadmium II plated
AN526C832R8 = 8-32 threads	1/2 OAL (under the truss head) Phillips drive	Stainless Steel Un-Plated

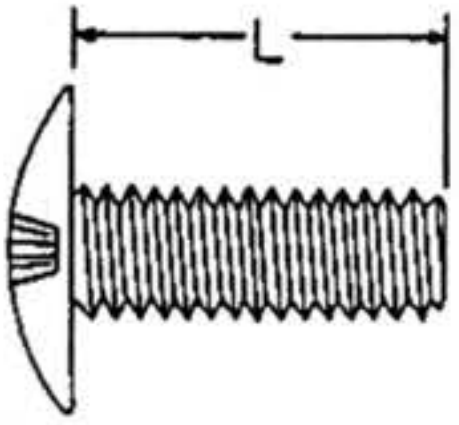

STEEL, CADMIUM II PLATED	STAINLESS STEEL	THREAD SIZE
AN526-440R	AN526C440R	4-40
AN526-632R	AN526C632R	6-32
AN526-832R	AN526C832R	8-32
AN526-1032R	AN526C1032R	10-32
AN526-428R	AN526C428R	1/4-28

LENGTH	LAST NUMBER
1/4	R4
5/16	R5
3/8	R6
7/16	R7
1/2	R8
9/16	R9
5/8	R10
11/16	R11
3/4	R12
13/16	R13
7/8	R14
15/16	R15
1	R16
1-1/16	R17
1-1/8	R18
1-3/16	R19
1-1/4	R20
1-5/16	R21
1-3/8	R22
1-7/16	R23
1-1/2	R24
1-9/16	R25
1-5/8	R26
1-11/16	R27
1-3/4	R28
1-13/16	R29
1-7/8	R30
1-15/16	R31
2	R32

253-848-9349
SpencerAircraft.com

Spencer Aircraft provides the information in this catalog for its customers as a ***reference only*** and it is not intended for design or guarantee of accuracy. Though it is our policy to ship all orders in a timely manner, Spencer Aircraft cannot guarantee that all items will be in stock at all times.

MS51957 & MS51958 SERIES

Un-Plated - Phillips Drive - Fully Threaded Screws

These are NON STRUCTURAL fasteners that replace the AN515C (coarse) & AN520C (fine) of like diameters & thread lengths

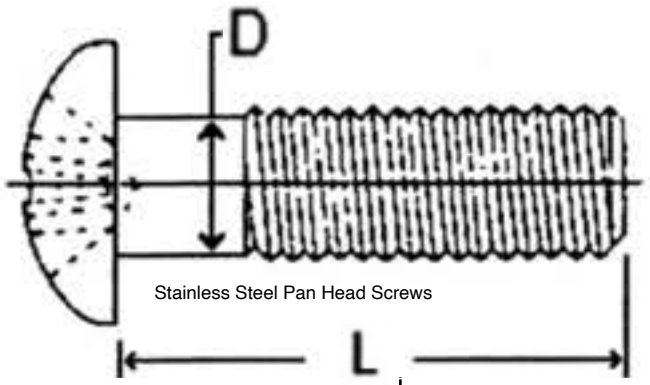

Stainless Steel Pan Head Screws

	MS51957 - Coarse Thread								MS51958 - Fine Thread							
LENGTH	**2-56**	**4-40**	**6-32**	**8-32**	**10-24**	**1/2-20**	**5/16-18**	**3/8-16**	**2-64**	**4-48**	**6-40**	**8-36**	**10-32**	**1/4-28**	**5/16-24**	**3/8-24**
.125	1	11	24	39					1	11	24	39				
.188	2	12	25	40	58				2	12	25	40	58			
.250	3	13	26	41	59				3	13	26	41	59			
.312	4	14	27	42	60	76			4	14	27	42	60	76		
.375	5	15	28	43	61	77	92		5	15	28	43	61	77	92	
.438	6	16	29	44	62	78	93		6	16	29	44	62	78	93	
.500	7	17	30	45	63	79	94	107	7	17	30	45	63	79	94	107
.562	141	120	123	126	129	132	135	138								
.625	8	18	31	46	64	80	95	108	8	18	31	46	64	80	95	108
.750	9	19	32	47	65	81	96	109	9	19	32	47	65	81	96	109
.875	10	20	33	48	66	82	97	110	10	20	33	48	66	82	97	110
1.000	142	21	34	49	67	83	98	111		21	34	49	67	83	98	111
1.125		121	124	127	130	133	136	139								
1.250		22	35	50	68	84	99	112			35	50	68	84	99	112
1.375		122	125	128	131	134	137	140								
1.500		23	36	51	69	85	100	113			36	51	69	85	100	113
1.750			37	52	70	86	101	114			37	52	70	86	101	114
2.000			38	53	71	87	102	115			38	53	71	87	102	115
2.250				54	72	88	103	116				54	72	88	103	116
2.500				55	73	89	104	117				55	73	89	104	117
2.750				56	74	90	105	118				56	74	90	105	118
3.000				57	75	91	106	119				57	75	91	106	119

Get your flight training today!

- ***For Recreation or Career***
- ***Single & Multi-Engine Fleet***
- ***Advanced Ratings and Ground Schools***
- ***Approved for VA Benefits***

Safety In Motion FLIGHT CENTER

safetyinmotion.aero
office hours: 9am-5pm every day
16911 103rd Ave E, Unit 102 Puyallup WA 98374
7825 Old Hwy 99 SE Olympia WA 98501

Call 253-840-5758 now and find which class works for you

NAS514P-NAS600 THRU 606 SERIES

Countersunk - Pan Head Alloy Steel - Full Thread Screws

Tensile Strength 125,000 to 140,000 PSI Countersunk
Tensile Strength 160,000 to 180,000 PSI Pan Head

These screws are commonly used for general purpose fastening, when durability and resistance to wear due to repeated installation and removal might be a problem. Both types are Phillips drive and Cadmium II plated.

Examples of Part Numbers

NAS514P428-8	=	1/4-28 thread Phillips Drive	1/2 overall length including the Countersunk Head	Alloy Steel
NAS514P428-8**P**	=	1/4-28 thread Phillips Drive	1/2 overall length including the Countersunk Head	Alloy Steel Cadmium II Plated
NAS603-12P	=	10-32 thread Phillips Drive	3/4 overall length under the Pan Head	Alloy Steel Cadmium II Plated
NAS601	=	8-32 thread Phillips Drive	9/16 overall length including the Countersunk Head	Alloy Steel Cadmium II Plated

NAS514

LENGTH	4-40	6-32	8-32	10-32	1/4-28	5/16-24	3/8-24
.188	440-3	632-3					
.250	440-4	632-4	832-4	1032-4			
.312	440-5	632-5	832-5	1032-5			
.375	440-6	632-6	832-6	1032-6	428-6		
.438	440-7	632-7	832-7	1032-7	428-7		
.500	440-8	632-8	832-8	1032-8	428-8	524-8	624-8
.625	440-10	632-10	832-10	1032-10	428-10	524-10	624-10
.750	440-12	632-12	832-12	1032-12	428-12	524-12	624-12
.875	440-14	632-14	832-14	1032-14	428-14	524-14	624-14
1.000	440-16	632-16	832-16	1032-16	428-16	524-16	624-16
1.125	440-18	632-18	832-18	1032-18	428-18	524-18	624-18
1.250	440-20	632-20	832-20	1032-20	428-20	524-20	624-20
1.375				1032-22	428-22		
1.500	440-24	632-24	832-24	1032-24	428-24	524-24	624-24
1.625				1032-26	428-26		
1.750		632-28	632-28	1032-28	428-28	524-28	624-28
1.875				1032-30	428-30		
2.000		632-32	832-32	1032-32	428-30	524-32	624-32

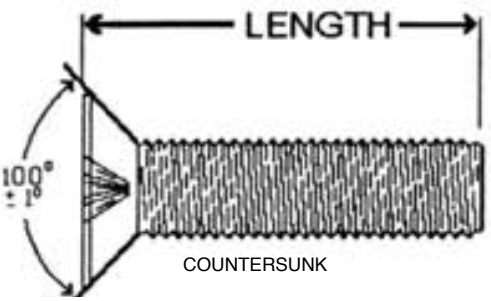

COUNTERSUNK

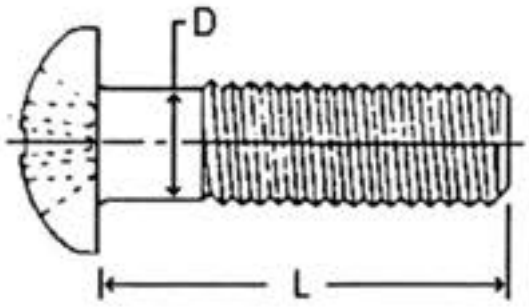

PAN HEAD

Pan Head	Thread Size	Countersunk Head
NAS600	4-40	NAS514P440-
NAS601	6-32	NAS514P632-
NAS602	8-32	NAS514P832-
NAS603	10-32	NAS514P1032-
NAS604	1/4-28	NAS514P428-
NAS605	5/16-24	NAS514P524-
NAS606	3/8-24	NAS514P624-

Length	Last Dash Number
1/4	4P
5/6	5P
3/8	6P
7/16	7P
1/2	8P
9/16	9P
5/8	10P
11/16	11P
3/4	12P
13/16	13P
7/8	14P
15/16	15P
1	16P
1-1/16	17P
1-1/8	18P
1-3/16	19P
1-1/4	20P
1-5/16	21P
1-3/8	22P
1-7/16	23P
1-1/2	24P
1-9/16	25P
1-5/8	26P
1-11/16	27P
1-3/4	28P
1-13/16	29P
1-7/8	30P
1-15/16	31P
2	32P

253-848-9349
SpencerAircraft.com

Spencer Aircraft provides the information in this catalog for its customers as a ***reference only*** and it is not intended for design or guarantee of accuracy. Though it is our policy to ship all orders in a timely manner, Spencer Aircraft cannot guarantee that all items will be in stock at all times.

SHEET METAL SCREWS

Commonly Used for Interiors & Non Structural Fastening

Phillips Drive Only

EXAMPLE PART NUMBERS	SCREW SIZE	LENGTH (in inches)	HEAD	END
8R5/8 OA	8R	5/8	OVAL	POINTED
8R1/2 TA	8R	1/2	TRUSS	POINTED
8R1/2 FB	8R	1/2	FLAT	BLUNT
8R1/2 TB	8R	1/2	TRUSS	BLUNT
8R1/2 FA	8R	1/2	FLAT	POINTED
S8R1/2 TA	* For Stainless Steel, add an (S) in Front of the part Number			

Available Threads Sheet Metal

4R
6R
8R
10R
12R

Available Lengths

1/4
3/8
1/2
5/8
3/4
1
1-1/4
1-1/2

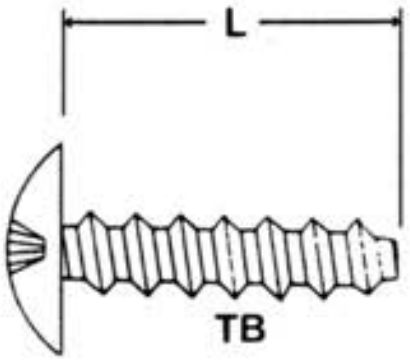

TRUSS - BLUNT

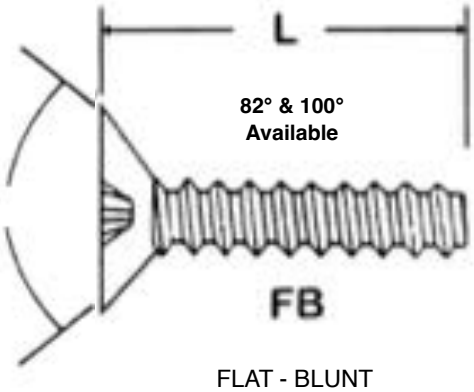

FLAT - BLUNT

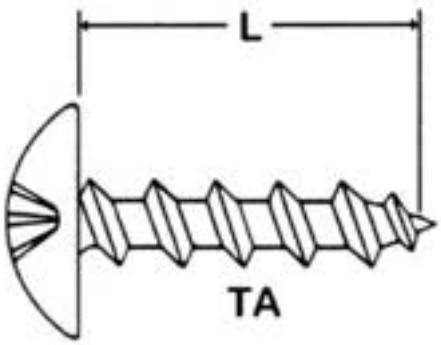

TRUSS - POINTED

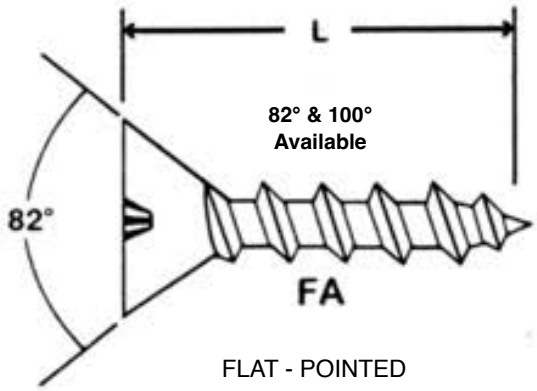

FLAT - POINTED

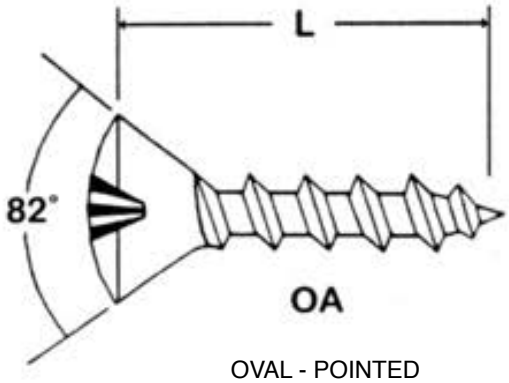

OVAL - POINTED

Spencer Aircraft provides the information in this catalog for its customers as a ***reference only*** and it is not intended for design or guarantee of accuracy. Though it is our policy to ship all orders in a timely manner, Spencer Aircraft cannot guarantee that all items will be in stock at all times.

DRIVE SCREW

AN535-# & MS21318-#

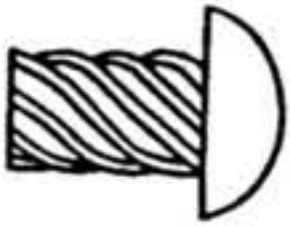

CARBON STEEL - CADMIUM PLATE - TYPE 2 CLASS 2

Length	Diameter	Drill Size	AN535-	MS21318-	Nominal Size
1/8	.060	55	00-0	1	00
3/16			00-3	2	
1/4			00-4	3	
1/8		51	0-2	7	0
3/16			0-3	8	
1/4			0-4	9	
1/8		44	2-2	13	2
3/16			2-3	14	
1/4			2-4	15	
3/16		37	4-3	20	4
1/4			4-4	21	
5/16			4-5	22	
1/4		31	6-4	27	6
1/16			6-5	28	
3/8			6-6	29	
1/2			6-8	30	
5/16		29		35	7
3/8				36	
1/2				37	
3/8		27	8-6	41	8
1/2			8-8	42	
5/8			8-10	43	
3/8		20	10-6	46	10
1/2			10-8	47	
5/8			10-10	48	

Pilot Gifts



253-848-9349
SpencerAircraft.com

Spencer Aircraft provides the information in this catalog for its customers as a ***reference only*** and it is not intended for design or guarantee of accuracy. Though it is our policy to ship all orders in a timely manner, Spencer Aircraft cannot guarantee that all items will be in stock at all times.

Brass - Clip-Locking Barrel Turnbuckle

MS21251-B#S (Short)

Dash #	Thread Size
B2S	6-40
B2L	
B3S	10-32
B3L	
B5S	1/4-28
B5L	
B6S	5/16-24
B6L	

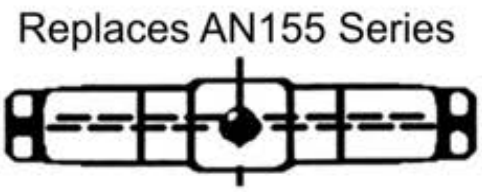

MS21251-B#L (Long)

Overall Length	Cable Diameter
2-1/4	1/16
4	
2-1/4	3/32
4	
2-1/4	5/32
4	
2-1/4	3/16
4	

Steel - Clip-Locking Fork Turnbuckle

MS21252-#S (Short)

Dash #	Thread	Thread Size	"Z" Length	Cable Size
2RS	Right	6-40	1-1/2	1/16
2LS	Left			
3RS	Right	10-32	1-5/8	3/32
3LS	Left			
5RS	Right	1/4-28	1-3/4	5/32
5LS	Left			

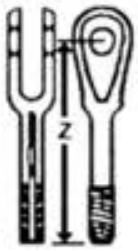

MS21252-#L (Long)

Dash #	Thread	Thread Size	"Z" Length	Cable Size
2RL	Right	6-40	2-3/8	1/16
2LL	Left			
3RL	Right	10-32	2-5/8	3/32
3LL	Left			
5RL	Right	1/4-28	2-5/8	5/32
5LL	Left			

Steel - Clip-Locking Pin Eye Turnbuckle

MS21254-#S (Short)

Dash #	Thread	Thread Size	"Z" Length	Cable Size
2RS	Right	6-40	1-1/2	1/16
2LS	Left			
3RS	Right	10-32	1-5/8	3/32
3LS	Left			
5RS	Right	1/4-28	1-3/4	5/32
5LS	Left			

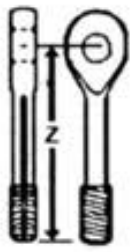

MS21254-#L (Long)

Dash #	Thread	Thread Size	"Z" Length	Cable Size
2RL	Right	6-40	2-3/8	1/16
2LL	Left			
3RL	Right	10-32	2-1/2	3/32
3LL	Left			
5RL	Right	1/4-28	2-5/8	5/32
5LL	Left			

Steel - Clip-Locking Cable Eye Turnbuckle

MS21255-#S (Short)

Dash #	Thread	Thread Size	"Z" Length	Cable Size
2RS	Right	6-40	1-1/2	1/16
2LS	Left			
3RS	Right	10-32	1-5/8	3/32
3LS	Left			
5RS	Right	1/4-28	1-3/4	5/32
5LS	Left			

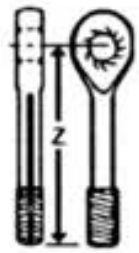

MS21255-#L (Long)

Dash #	Thread	Thread Size	"Z" Length	Cable Size
2RL	Right	6-40	2-3/8	1/16
2LL	Left			
3RL	Right	10-32	2-1/2	3/32
3LL	Left			
5RL	Right	1/4-28	2-5/8	5/32
5LL	Left			

Locking Clip for MS Turnbuckle Barrels

MS21256-# Stainless Steel

Dash #	Length
1	1.078
2	1.955
3	2.015

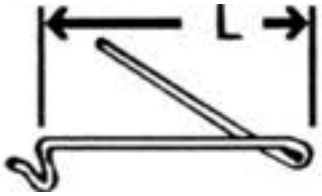

S = Steel
B = Brass

Spencer Aircraft provides the information in this catalog for its customers as a ***reference only*** and it is not intended for design or guarantee of accuracy. Though it is our policy to ship all orders in a timely manner, Spencer Aircraft cannot guarantee that all items will be in stock at all times.

MS20667

Terminal - Wire Rope - Swaging - Fork End

Stainless Steel, Passivated Finish

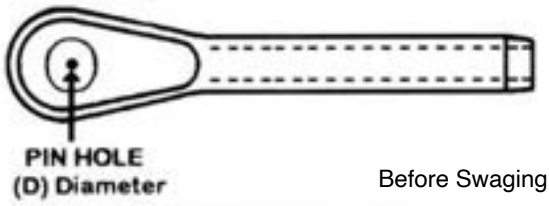

Before Swaging

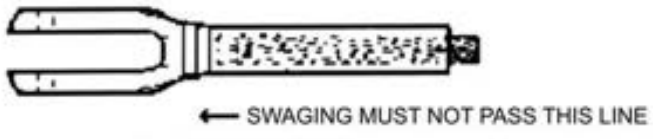

After Swaging

MS PART NUMBER Corrosion Resistant Steel	Nominal Cable Diameter	Pin Hole Diameter (D)		Minimum Breaking Strength in Pounds
MS20667-2	1/16	.190	+.002 -.000	480
MS20667-3	3/32			920
MS20667-4	1/8			2,000
MS20667-5	5/32	.250		2,800
MS20667-6	3/16	.313		4,200
MS20667-7	7/32			5,600
MS20667-8	1/4	.375		7,000

MS20668

Terminal - Wire Rope - Swaging - Pin Eye End

Stainless Steel, Passivated Finish

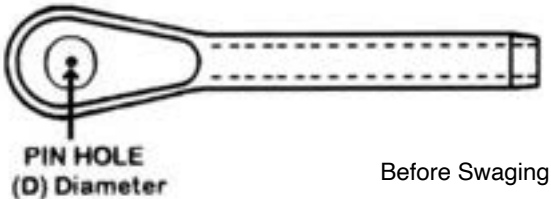

Before Swaging

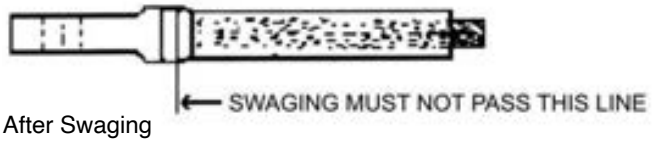

After Swaging

MS PART NUMBER Corrosion Resistant Steel	Nominal Cable Diameter	Pin Hole Diameter (D)		Minimum Breaking Strength in Pounds
MS20668-2	1/16	.190	+.002 -.000	480
MS20668-3	3/32			920
MS20668-4	1/8			2,000
MS20668-5	5/32	.250		2,800
MS20668-6	3/16	.313		4,200
MS20668-7	7/32			5,600
MS20668-8	1/4	.375		7,000



Spencer Aircraft provides the information in this catalog for its customers as a ***reference only*** and it is not intended for design or guarantee of accuracy. Though it is our policy to ship all orders in a timely manner, Spencer Aircraft cannot guarantee that all items will be in stock at all times.

CABLE TERMINALS

Stud End - Swaged

Stainless Steel, UN3F/UN3C Passivated Finish



AN666-#
MS21259-#

RIGHT HAND THREAD			LEFT HAND THREAD		
Dash Number	**Thread Size**	**Cable Size**	**Dash Number**	**Thread Size**	**Cable Size**
2RH	6-40	1/16	2LH	6-40	1/16
3RH	10-32	3/32	3LH	10-32	3/32
4RH	1/4-28	1/8	4LH	1/4-28	1/8
5RH		5/32	5LH		5/32
6RH	5/16-24	3/16	6LH	5/16-24	3/16



AN669-#
MS21260-#

RIGHT HAND THREAD			LEFT HAND THREAD		
Dash Number	**Thread Size**	**Cable Size**	**Dash Number**	**Thread Size**	**Cable Size**
S2RH	6-40	1/16	2LH	6-40	1/16
S3RH	10-32	3/32	3LH	10-32	3/32
S4RH	1/4-28	1/8	4LH	1/4-28	1/8
S5RH		5/32	5LH		5/32

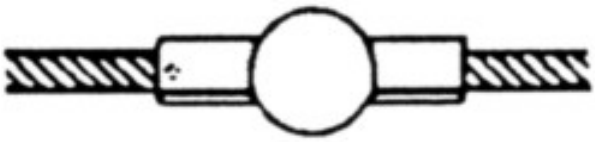

MS20663C
Double End



MS20664C
Single End

RIGHT HAND THREAD

Dash Number	Cable Diameter	Min. Break Strength
C2	1/16	480#
C3	3/32	920#
C4	1/8	2000#
C5	5/32	2800#



THREADED
AN490# (Unplated), AN490HT#P (Plated)
4130 Steel, Heat Treated, Type 2 Class 2 Cadmium Plating

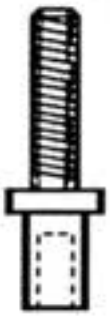

Thread Size	Tube Size X Wall Thk.	Unplated Dash #	Plated Dash #
1/4-28	5/16 x .035	5	5P
	3/8 x .035	6	6P
	1/2 x .035	8	8P
5/16-24	5/8 x .035	10	10P
	3/4 x .035	11	11P

PLAIN END FORK
AN481#, AN481#P, MS27976#
1035/1042 Carbon Steel, Type 2 Class 2 Cadmium Plating

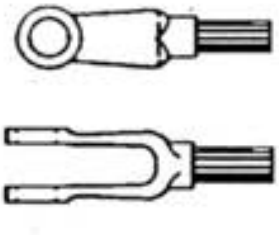

Shank Diameter	Hole Diameter	Fork Style	Unplated		Plated	
			AN481-	MS27976-	AN481-	MS2796-
.035	.250	Wide	1	21	1P	1
		Narrow	2	22	2P	2
	.188	Wide	3	23	3P	3
		Narrow	4	24	4P	4

ADJUSTABLE CLEVIS FORK
AN486-#, MS27975
1035/1042 Carbon Steel, Type 2 Class 3 Cadmium Plating

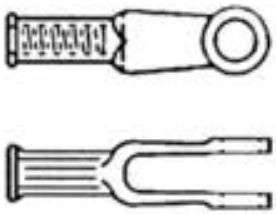

Internal Thread	Hole Diameter	Fork Style	AN486 Dash #	MS27975 Dash #
1/4-28	.250	Wide	1	1
		Narrow	2	2
	.188	Wide	3	3
		Narrow	4	4

THREADED CLEVIS TERMINAL (TIE ROD END)
AN665-#L (Left Hand Thread), AN665-#R (Right Hand Thread)
Carbon Steel, Type 2 Class 3 Cadmium Plating

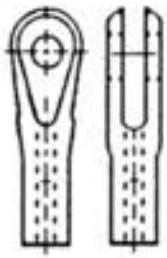

Thread Size	Hole Diameter	Rated Strength	Left Hand Dash #	Right Hand Dash #
6-40	.190	1200#	10L	10R
10-32		2400#	21L	21R
1/4-28	.250	4200#	34L	34R
5/16-24	.313	4600#	46L	46R



Spencer Aircraft provides the information in this catalog for its customers as a ***reference only*** and it is not intended for design or guarantee of accuracy. Though it is our policy to ship all orders in a timely manner, Spencer Aircraft cannot guarantee that all items will be in stock at all times.

AN115 and MS20115

Shackle-Wire Rope

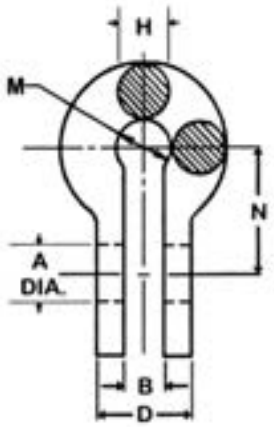

AN Part No.	Shackle and Cable Strength in Pounds	A (Hole) +.010 -.000 Diameter	B +010-.000	D	H	M Diameter	N
AN115-8	800	.188	.109	1/4	11/64	1/4	9/16
AN115-16	1,600		.150	5/16			
AN115-21	2,100						
AN115-32	3,200	.250	.203	7/16	1/4	3/8	3/4
AN115-46	4,600	.313		1/2	9/32	7/16	13/16
AN115-61	6,100	.375		9/16	5/16	1/2	7/8
AN115-80	8,000		.266		7/16	7/16	1
AN115-125	12,500	.438	.344	23/32	19/32	5/8	1-1/8
AN115-175	17,000	.500	.406	13/16	11/16		1-1/4

AN and **MS** part numbers listed are for Cadmium or Zinc Plated Steel.
Material: Cadmium or Zinc Plated Steel.
Dimensions are in inches; tolerances in fractions of 1/64, decimals of .010 unless otherwise specified.

Examples of Part Numbers:

AN115-21 = Shackle, Strength 2100 lbs., Cadmium or Zinc Plated Steel

MS20115F6 = Shackle, Non-Corrosion Resistant Steel, 6/32 diameter Wire Rope

Dash Number Non-Corrosion Resistant Steel	Nominal Wire Rope Diameter (Ref.)	Min. Breaking Strength in Pounds	A +.005 -.000 Diameter	B +.007 -.003 Diameter	D +.010 - .005 Diameter	H +-.016	M +.006-.000 Diameter	N +-.016
F2	1/16	480	.190	.093	.218	.156	.188	.562
F3	1/32	920		.108	.254		.219	
F4	1/8	2,000		.195	.383	.250	.250	
F5	5/32	2,800	.250	.202	.406		.281	.750
F6	3/16	4,200	.313	.260	.543	.312	.375	.812
F7	7/32	5,600		.296	.625	.344	.406	.875
F8	1/4	7,000	.375	.313	.688	.406	.438	1.000



CORROSIONX

- STOPS AND PREVENTS CORROSION AND RUST
- A MULTI-FUNCTIONAL PRODUCT
- NOT HARMFUL TO THE ENVIRONMENT

AN100

Thimble Wire Cable

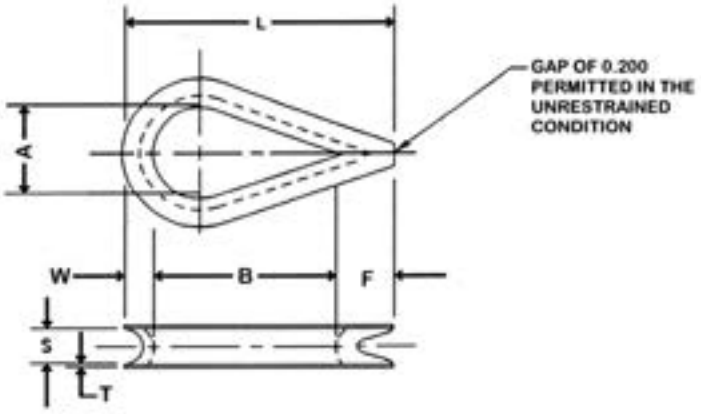

AN Part Number								
Low Carbon Steel	Corrosion Resisting Steel	Cable Diameter	A	B	F Minimum	S +.016, -.000	T	W +.016, -.000
AN100-3	AN100C-3	1/16	.350	.703	.188	.094	.032 +/- .003	.078
AN100-4	AN100C-4	1/8-3/32	.350	.703	.219	.141	.032 +/- .003	.078
AN100-5	AN100C-5	5/32	.400	.797	.219	.172	.032 +/- .003	.109
AN100-6	AN100C-6	3/16	.500	1.000	.313	.203	.032 +/- .003	.141
AN100-7	AN100C-7	7/32	.600	1.203	.375	.234	.032 +/- .003	.156
AN100-8	AN100C-8	1/4	.700	1.406	.406	.266	.032 +/- .003	.172
AN100-9	AN100C-9	7/32	.800	1.609	.406	.297	.040 +/- .004	.203
AN100-10	AN100C-10	5/16	.900	1.797	.438	.328	.040 +/- .004	.219
AN100-12	AN100C-12	3/8	1.000	2.000	.625	.391	.060 +/- .004	.266
AN100-14	AN100C-14	7/16	1.125	2.250	.813	.453	.080 +/- .004	.328
AN100-16	AN100C-16	1/2	1.250	2.500	1.000	.516	.080 +/- .004	.406

MS51844

Oval Splices

Sleeve Swaging Wire Rope

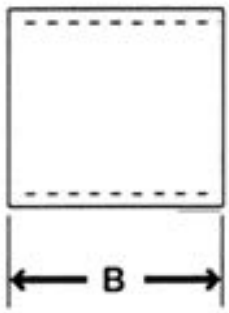

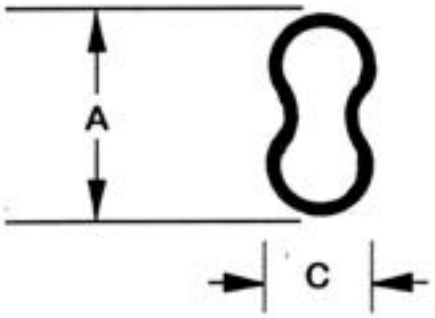

MS51844	NICOPRESS #	LOOS & Co. #	Plating	Cable Size	A	B	C
-22	28-1-C	SL2-2P	ZINC	1/16	.270	.440	.180
-23	28-2-G	SL2-3P		3/32	.380	.440	.240
-24	28-3-M	SL2-4P		1/8	.512	.750	.340
-25	28-4-P	SL2-5P		5/32	.600	.750	.370
-26	28-6-X	SL2-6P		3/16	.710	1.00	.450
-42	18-1-C	SL2-2	NONE	1/16	.270	.440	.180
-43	18-2-G	SL2-3		3/32	.380	.440	.240
-44	18-3-M	SL2-4		1/8	.512	.750	.340
-45	18-4-P	SL2-5		5/32	.600	.750	.370
-46	18-6-X	SL2-6		3/16	.710	1.00	.450
-82	428-2-VC	SL2-2TP	TIN	1/16	.270	.440	.180
-83	428-3-VG	SL2-3TP		3/32	.380	.440	.240
-84	428-4-VM	SL2-4TP		1/8	.512	.750	.340
-85	428-5-VP	SL2-5TP		5/32	.600	.750	.370
-86	428-6-VX	SL2-6TP		3/16	.710	1.00	.450

253-848-9349
SpencerAircraft.com

Spencer Aircraft provides the information in this catalog for its customers as a ***reference only*** and it is not intended for design or guarantee of accuracy. Though it is our policy to ship all orders in a timely manner, Spencer Aircraft cannot guarantee that all items will be in stock at all times.

MIL W 83420

Flexible Wire Rope

Aircraft Cable 7x19



Cable is sold “Cut to Length” by the foot

NOTE: Unless otherwise noted, all dimensions are in inches

Part #	Nominal Diameter	Minimum Diameter	Maximum Diameter	Construction Material	Minimum Breaking Strength lbs.	Approx. Weight 1000 Feet
C 1/16 7x7	1/16	0.0625	0.0715	7 x 19 Stainless	480	7.5
C 3/32 7x19	3/32	0.0938	0.1038		920	16
C 1/8 7x19	1/8	0.1250	0.1360		1760	29
C5/32 7x19	5/32	0.1563	0.1733		2400	45
C 3/16 7x19	3/16	0.1875	0.2065		3700	65
C 1/4 7x19	1/4	0.2500	0.2710		6400	110

MS20221

Heavy Duty Aircraft Control Groove Pulley

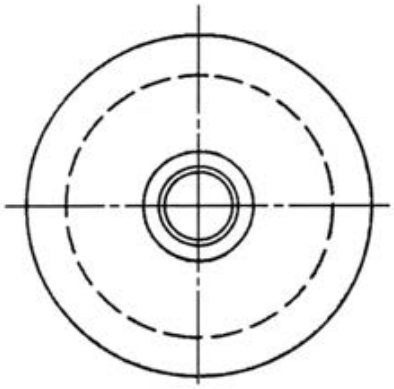

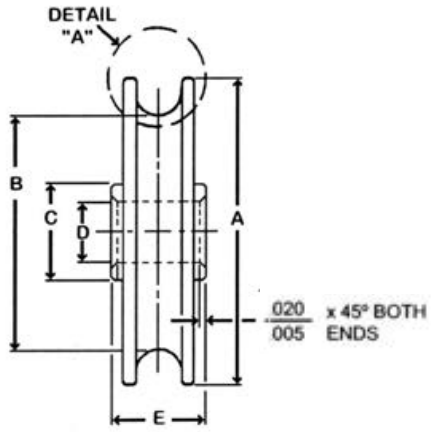

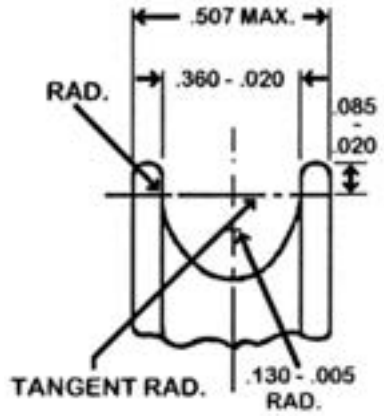

Examples of Parr Numbers:

MS20221-2 Pulley with high pressure laminated phenolic sheave & fixed ball bearing with contact seal

MS20221A2 Pulley with aluminum alloy sheave & fixed ball bearing with contact seal. Anodized per MIL-A8625

Dimensions in Inches:

Unless otherwise specified, tolerances -.010. End faces of bearing hubs are flat & square within + or -1°

AN221 Pulleys & MS20221 Pulleys of like dash numbers are universally, functionally & dimensionally

Dash Number		Cable Size	A dia.	B dia.	C dia. Ref.	D dia. -.0005	E -.005	Weight Max. lbs.	Allowable Limit Load on Pulley	Pulley Strength: Max Limit Load on Cable Independent of Wrap Angle			Bearing Numbers
Phenolic	Aluminum									3/16 Cable	7/32 Cable	1/4 Cable	
	A1	3/16	2.630	2.005	.500	.3125	.625	.165	2800	2620	3060	3500	PD5K
-2	A2	7/32	4.130	3.505	.800	.5000	.750	.450	4900				P8
-3	A3	1/4	5.630	5.005				.680	7000				P8

Spencer Aircraft provides the information in this catalog for its customers as a ***reference only*** and it is not intended for design or guarantee of accuracy. Though it is our policy to ship all orders in a timely manner, Spencer Aircraft cannot guarantee that all items will be in stock at all times.

M83240/2	Stainless Steel		Type 1, Comp B
Government Designation	**Diameter**	**Construction**	**Loos Part #**
M83420/2-001	1/32	3 x 7	SF03137
M83240/2-002	1/16	7 x 7	SF06377
M83420/2-003		7 x 19	SF06379
M83420/2-004	3/32		SF09479
M83240/2-005	1/8		SF12579
M83240/2-006	5/32		SF15679
M83240/2-007	3/16		SF18879
M83240/2-008			SF18879
M83240/2-009	1/4		SF25079
M83240/2-010			SF25079
M83240/2-011	9/32		SF28179
M83240/2-012	5/16		SF31379
M83240/2-013	3/8		SF37579
M83240/2-014	3/64	7 x 7	SF04777
M83240/2-015	3/32		SF09477
M83240/2-016	7/32	7 x 19	SF21979

M83420/1	Galvanized, Non Jacketed		Type 1, Comp A
Government Designation	**Diameter**	**Construction**	**Loos Part #**
M83420/1-001	1/16	7 x 7	GF06377
M83420/1-002	3/32		GF09477
M83420/1-003	1/8	7 x 19	GF12579
M83420/1-004			
M83420/1-005	5/32		GF15679
M83420/1-006	3/16		GF18879
M83420/1-007	7/32		GF21979
M83420/1-008	1/4		GF25079
M83420/1-009	5/16		GF31379
M83420/1-010	3/8		GF37579
M83420/1-011	1/32	3 x 7	GF03137
M83420/1-012	3/64	7 x 7	GF04777
M83420/1-013	1/16	7 x 19	GF06379
M83420/1-014	3/32		GF09479
M83420/1-015	9/32		GF28179

M83420/1	Galvanized, Jacketed Tin over Zinc		Type 1, Comp A
Government Designation	**Diameter**	**Construction**	**Loos Part #**
M83420/1-101	1/16	7 x 7	TF06377
M83420/1-102	3/32		TF09477
M83420/1-103	1/8	7 x 19	TF12579
M83420/1-104			
M83420/1-105	5/32		TF15679
M83420/1-106	3/16		TF18879
M83420/1-114	3/32		TF09479

M83420/3	Galvanized, Jacketed Tin over Zinc		Type 2, Comp A	
Government Designation	**Diameter**	**Construction**	**Diameter after jacket**	**Loos Part #**
M83420/3-103	1/8	7 x 19	3/16	TF1257901
M83420/3-104	3/16		1/4	TF1887901

M83420/4	Stainless, Jacketed		Type 2, Comp B	
Government Designation	**Diameter**	**Construction**	**Diameter After Jacket**	**Loos Part #**
M83420/4-001	3/64	7 x 7	1/16	SF0477701
M83420/4-002	1/16		3/32	SF0637701
M83420/4-003	3/32	7 x 19	1/8	SF0947901
M83420/4-004				
M83420/4-005	3/16		1/4	SF1887901
M83420/4-006	1/4		5/16	SF2507901
M83420/4-007				
M83420/4-008	1/32	3 x 7	3/64	SF0313701
M83420/4-009	3/64	7 x 7	5/64	SF0477702
M83420/4-010	1/16		1/8	SF0637702
M83420/4-011		7 x 19	3/32	SF0637901
M83420/4-012			1/8	SF0637902
M83420/4-013	3/32	7 x 7		SF0947701
M83420/4-014			5/32	SF0947702
M83420/4-015		7 x 19		SF0947902
M83420/4-016	1/8		3/16	SF1257901
M83420/4-017	5/32		7/32	SF1567901
M83420/4-018			9/32	SF1567902
M83420/4-019	3/16		5/16	SF1887902
M83420/4-020	7/32		9/32	SF2197901
M83420/4-021			11/32	SF2197902
M83420/4-022	1/4		3/8	SF2507902
M83420/4-023	9/32		13/32	SF2817902
M83420/4-024	5/16		7/16	SF3137901
M83420/4-025	3/8		1/2	SF3757901

M83420/3	Galvanized, Jacketed		Type 2, Comp A	
Government Designation	**Diameter**	**Construction**	**Diameter After Jacket**	**Loos Part #**
M83420/3-001	3/64	7 x 7	1/16	GF0477701
M83420/3-002	3/32		1/8	GF0947701
M83420/3-003	1/8	7 x 19	3/16	GF1257901
M83420/3-004	3/16		1/4	GF1887901
M83420/3-005	1/32	3 x 7	3/64	GF0313701
M83420/3-006	3/64	7 x 7	5/64	GF0477702
M83420/3-007	1/16		3/32	GF0637701
M83420/3-008			1/8	GF0637702
M83420/3-009		7 x 19	3/32	GF0637901
M83420/3-010			1/8	GF0637902
M83420/3-011	3/32	7 x 7	5/32	GF0947702
M83420/3-012		7 x 19	1/8	GF0947901
M83420/3-013			5/32	GF0947902
M83420/3-014	5/32		7/32	GF1567901
M83420/3-015			9/32	GF1567902
M83420/3-016	3/16		5/16	GF1887902
M83420/3-017	7/32		9/32	GF2197901
M83420/3-018			11/32	GF2197902
M83420/3-019	1/4		5/16	GF2507901
M83420/3-020			3/8	GF2507903
M83420/3-021	9/32		13/32	GF2817901
M83420/3-022	5/16		7/16	GF3137901
M83420/3-023	3/8		1/2	GF3757901

Spencer Aircraft provides the information in this catalog for its customers as a ***reference only*** and it is not intended for design or guarantee of accuracy. Though it is our policy to ship all orders in a timely manner, Spencer Aircraft cannot guarantee that all items will be in stock at all times.

MS20220

Flight Control Aircraft Groove Pulley

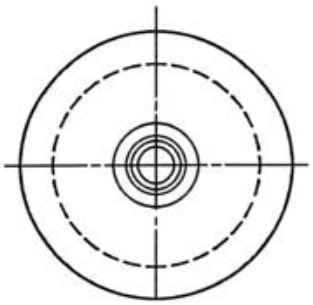

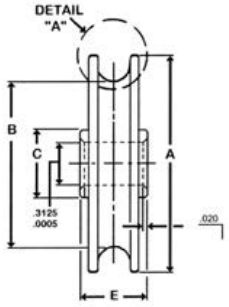

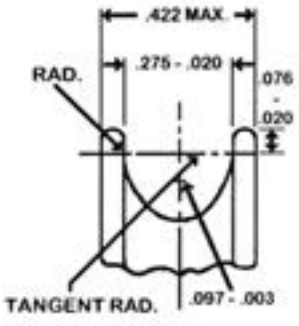

Dash Number								Pulley Strength				
									Max Limit Load on Cable Independent of Wrap Angle			
Phenolic	Aluminum	Cable Size	A dia.	B dia.	C Ref.	E -.005	Weight Max. lbs.	Allowable Limit Load on Pulley	1/8 Cable	5/32 Cable	3/16 Cable	Bearing Numbers
-1	A1	1/8 5/32 AND 3/16	1.755	1.255	.465	.625	.070	500 (A)	830	1040	1250	P5K
-2	A2		3.005	2.505	.415		.175	1680				PD5K
-3	A3		4.255	3.755			.260	2500				
-4	A4		5.505	5.005			.370					

MS20219

Secondary Control Aircraft Groove Pulley

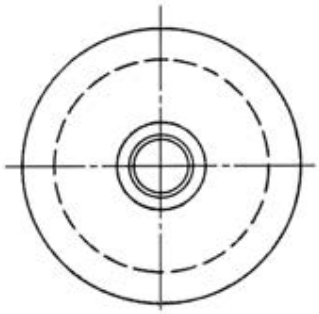

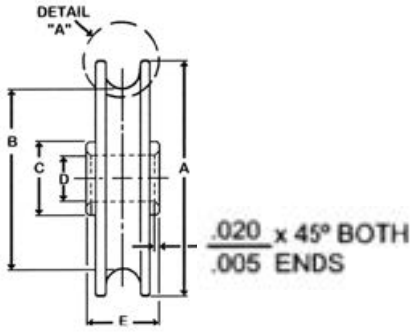

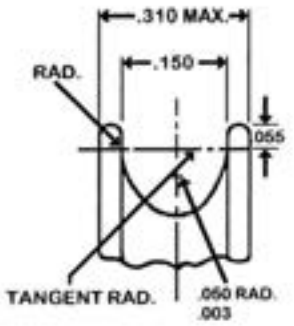

MS20219

Secondary Control Aircraft Groove Pulley

Dash Number									
Phenolic Sheave	Aluminum Sheave	Cable Size	A +- .005 dia.	B +-.005 dia.	C dia. Ref.	D +-.005 dia.	E -.005	Weight Max. lbs.	Bearing Numbers
-1	A1	1/16 AND 3/32 FOR ALL	1.312	1.000	.423	.2500	.438	.058	W4AK / P4K
-2	A2		1.750	1.438	.423	.2500	.438	.066	PK
-3	A3		1.750	1.438	.769	.6250	.438	.096	P10K
-4	A4		2.625	2.312	.423	.2500	.438	.110	P4K
-5	A5		2.625	2.312	.769	.6250	.438	.125	P10K

Dash Number		Pulley Strength		
			Max Limit Load on Cable Independent of Wrap Angle	
Phenolic Sheave	Aluminum Sheave	Allowable Limit Load on Pulley	1/16 Cable	3/32 Cable
-1	A1	480	307	460
-2	A2	480	307	460
-3	A3	480	307	460
-4	A4	920	307	460
-5	A5	920	307	460

Spencer Aircraft provides the information in this catalog for its customers as a ***reference only*** and it is not intended for design or guarantee of accuracy. Though it is our policy to ship all orders in a timely manner, Spencer Aircraft cannot guarantee that all items will be in stock at all times.

MS24566

Anti-Friction Bearing Control Pulleys

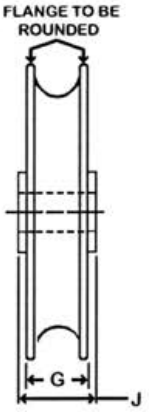

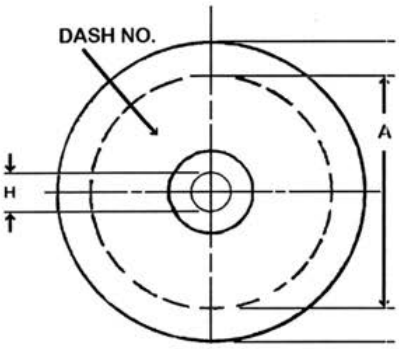

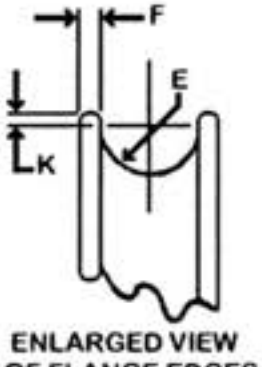

MS24566

Anti-Friction Bearing Control Pulleys

Dash Number	Cable Size	A Groove +.000, -.010 dia.	B +.000, -.010 dia.	E Rad.	F	G	H +.0000, -.0005 dia.	J +.000, -.005 dia.	K +.005, -.005 dia.	Pulley Limit Weight Max. lbs.	Load Pounds	Bearing Numbers
-1B	1/16, 5/64, 3/32	.972	1.250	.052 (+.003/-.000)	.060 +/- .005	.250 (+.000/-.010)	.1900	.297	.040	.026	300	KP3AK
-2B	1/16, 5/64, 3/32	2.222	2.500	.052 (+.003/-.000)	.060 +/- .005	.250 (+.000/-.010)	.1900	.297	.040	.075	500	PK3K
-3B	1/8, 5/32, 3/16	1.510	2.000	.109 (+.003/-.000)	.086 +/- .007	.422 (+.000/-.012)	.2500	.484	.086	.090	600	KP4K
-4B	1/8, 5/32, 3/16	3.010	3.500	.109 (+.003/-.000)	.086 +/- .007	.422 (+.000/-.012)	.2500	.484	.086	.200	1200	KP4K
-5B	3/16, 7/32, 1/4	4.374	5.000	.140 (+.005/-.000)	.140 +/- .007	.500 +/- .007	.3750	.620	.092	.500	3000	KP6
-6B	3/16, 7/32, 1/4	5.374	6.000	.140 (+.005/-.000)	.140 +/- .007	.500 +/- .007	.3750	.620	.092	.660	4000	KP6

SA150

Float Water Rudder Pulley

(Same as EDO)

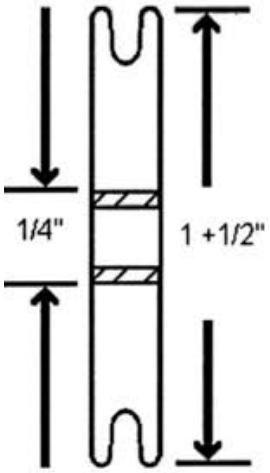

8-2356

Phenolic Bore Pulley

Used as Guide & Secondary Control Pulley

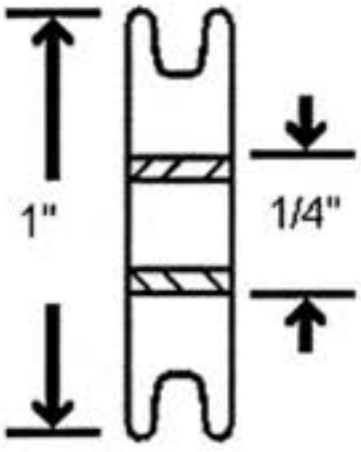

253-848-9349
SpencerAircraft.com

Spencer Aircraft provides the information in this catalog for its customers as a ***reference only*** and it is not intended for design or guarantee of accuracy. Though it is our policy to ship all orders in a timely manner, Spencer Aircraft cannot guarantee that all items will be in stock at all times.

CAMLOC STUDS

Camloc Stud Slotted Protruding Head
2600-# (Carbon Steel)

Total Panel Thickness Using 212-12 Receptacles	Dash Number
.030-.059	1
.060-.089	2
.090-.119	3
.120-.149	4
.150-.179	5
.180-.209	6
.210-.239	7
.240-.269	8
.270-.299	9
.300-.329	10
.330-.359	11
.360-.389	12

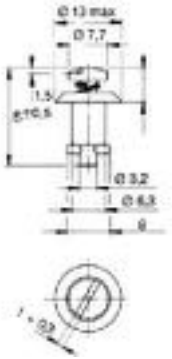

Camloc Stud Slotted Flush Head
2700-# (Carbon Steel)

Total Panel Thickness Using 212-12 Receptacles	Dash Number
.030-.059	1
.060-.089	2
.090-.119	3
.120-.149	4
.150-.179	5
.180-.209	6
.210-.239	7
.240-.269	8
.270-.299	9
.300-.329	10
.330-.359	11
.360-.389	12

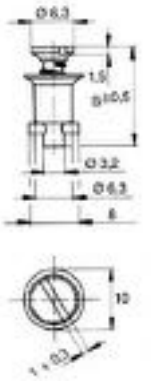

Camloc Stud Wing Protruding Head
2600-W (Carbon Steel)

Total Panel Thickness Using 212-12 Receptacles	Dash Number
.030-.059	1
.060-.089	2
.090-.119	3
.120-.149	4
.150-.179	5
.180-.209	6
.210-.239	7
.240-.269	8
.270-.299	9
.300-.329	10
.330-.359	11
.360-.389	12

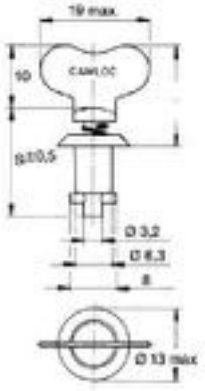

Camloc Stud Phillips Protruding Head
26S8-# (Carbon Steel)

Total Panel Thickness Using 212-12 Receptacles	Dash Number
.030-.059	1
.060-.089	2
.090-.119	3
.120-.149	4
.150-.179	5
.180-.209	6
.210-.239	7
.240-.269	8
.270-.299	9
.300-.329	10
.330-.359	11
.360-.389	12

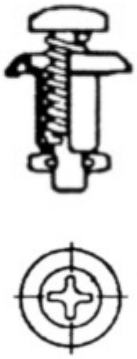

Camloc Stud Phillips Flush Head
27S3-# (Carbon Steel)

Total Panel Thickness Using 212-12 Receptacles	Dash Number
.030-.059	1
.060-.089	2
.090-.119	3
.120-.149	4
.150-.179	5
.180-.209	6
.210-.239	7
.240-.269	8
.270-.299	9
.300-.329	10
.330-.359	11
.360-.389	12



Used as Guide &

Camloc Receptacle Standard Mounting General Purpose

Part Number	Material	Rivet Hold Style
212-12	Silicon-Bronze	Plain
212-12D	Silicon-Bronze	Countersunk
212-12S	Stainless Steel	Plain
212-12SD	Stainless Steel	Countersunk

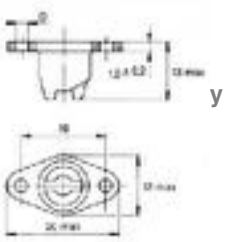

y Cor

Camloc Retaining Ring

Part Number	Use
2600-LW	2600 Series Stud
27S5-1	2700 Series Stud and Dimpled Panels

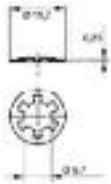

Camloc Retaining Ring - Split

Part Number	Material
2600-SW	Stainless Steel
2600-SW2	CAD Plated Steel

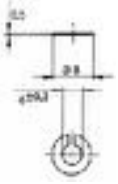

Spencer Aircraft provides the information in this catalog for its customers as a ***reference only*** and it is not intended for design or guarantee of accuracy. Though it is our policy to ship all orders in a timely manner, Spencer Aircraft cannot guarantee that all items will be in stock at all times.

CAMLOC STUDS

CAMLOC STUD Slotted Flush Head

4002-# Carbon Steel

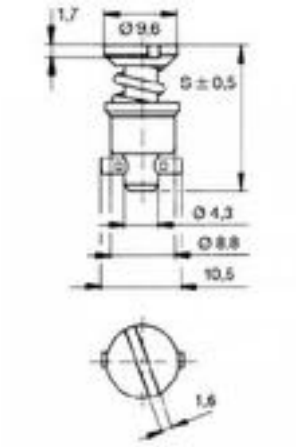

Total Panel Thickness Using 214-16 Receptacle	Total Panel Thickness Using 244-16 and 22	Dash Number
.081-.110	.051-.080	2
.111-.140	.081-.110	3
.141-.170	.111-.140	4
.171-.200	.141-.170	5
.201-.230	.171-.200	6
.231-.260	.201-.230	7
.261-.290	.231-.260	8
.291-.320	.261-.290	9
.321-.350	.291-.320	10
.351-.380	.321-.350	11
.381-.410	.351-.380	12
.411-.440	.381-.410	13
.441-.470	.411-.440	14
.471-.500	.441-.470	15

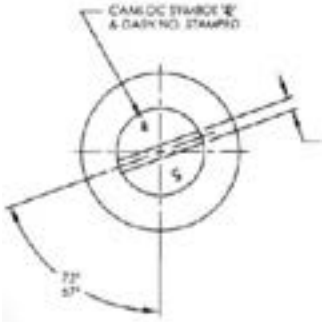

CAMLOCK STUD Phillips Flush Head

40S5-# Carbon Steel (Not Available in Stainless)

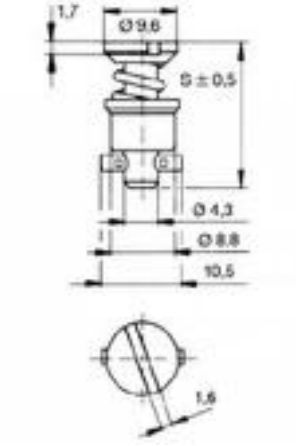

Total Panel Thickness Using 214-16 Receptacle	Total Panel Thickness Using 244-16 and 22	Dash Number
.081-.110	.051-.080	2
.111-.140	.081-.110	3
.141-.170	.111-.140	4
.171-.200	.141-.170	5
.201-.230	.171-.200	6
.231-.260	.201-.230	7
.261-.290	.231-.260	8
.291-.320	.261-.290	9
.321-.350	.291-.320	10
.351-.380	.321-.350	11
.381-.410	.351-.380	12
.411-.440	.381-.410	13
.441-.470	.411-.440	14
.471-.500	.441-.470	15

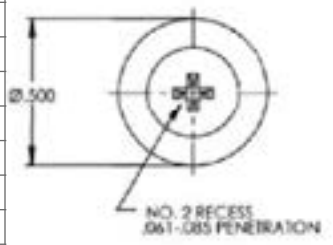

CAMLOCK STUD Wing Flush Head

4002-#W Carbon Steel

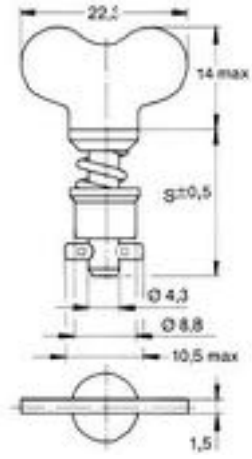

Total Panel Thickness Using 214-16 Receptacle	Total Panel Thickness Using 244-16 and 22	Dash Number
.081-.110	.051-.080	2W
.111-.140	.081-.110	3W
.141-.170	.111-.140	4W
.171-.200	.141-.170	5W
.201-.230	.171-.200	6W
.231-.260	.201-.230	7W
.261-.290	.231-.260	8W
.291-.320	.261-.290	9W
.321-.350	.291-.320	10W
.351-.380	.321-.350	11W
.381-.410	.351-.380	12W
.411-.440	.381-.410	13W
.441-.470	.411-.440	14W
.471-.500	.441-.470	15W

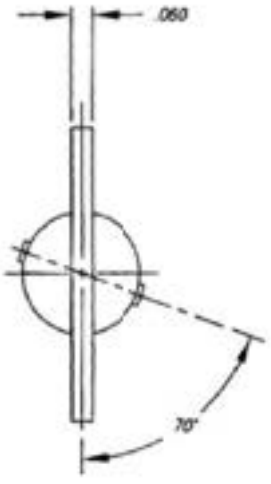

253-848-9349
SpencerAircraft.com

Spencer Aircraft provides the information in this catalog for its customers as a ***reference only*** and it is not intended for design or guarantee of accuracy. Though it is our policy to ship all orders in a timely manner, Spencer Aircraft cannot guarantee that all items will be in stock at all times.

Grommets

GROMMETS

4002-# Ring Retained (Heavy Duty Series) 40G#

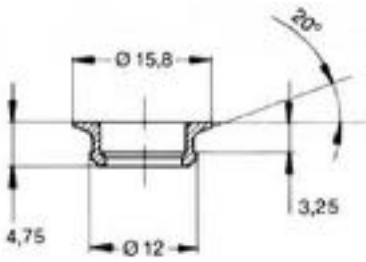

Max. Panel Thickness	Part Number	Material	Style
.025	4002-N2S	Stainless Steel	A
	4002-N2	CAD Plated Steel	
.065	4002-NS	Stainless Steel	
	4002-N	CAD Plated Steel	
	40G6-2	Alloy Steel	
.094	4002-0S	Stainless Steel	
	4002-0	CAD Plated Steel	
	40G6-1	Alloy Steel	
.074	4002-GS	Stainless Steel	B
	4002-G	CAD Plated Steel	
	40G5	Alloy Steel	
.117	4002-HS	Stainless Steel	
	4002-H	CAD Plated Steel	
	40G10	Alloy Steel	
.065	40G1-5		C
.092	40G1-8		
.113	40G1-10		
.128	40G1-11		

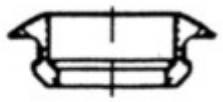

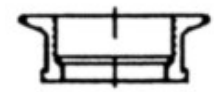



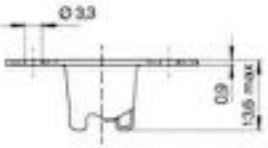

RECEPTACLE

Standard Mounting (Heavy Duty Series)

214-16

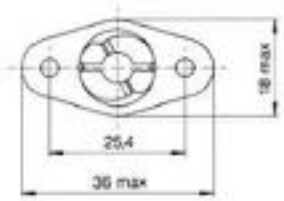

Part Number	Material	Rivet Hole Style
214-16	Silicon Bronze	Plain
214-16D		Countersunk
214-16S	Stainless Steel	Plain
214-16SD		Countersunk

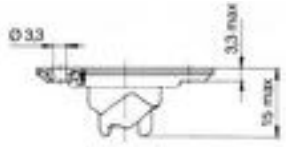

RECEPTACLE

244-16 1/16"Float Floating (Heavy Duty Series) 244-22 1/8" Float

Part Number	Material	Rivet Hole Style
214-16	Steel & Bronze	Plain
214-16D		Dimpled
214-16S	Stainless Steel	Plain
214-16SD		Dimpled
244-22	Steel & Bronze	Plain

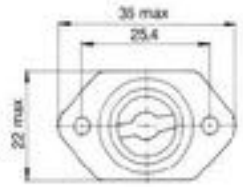

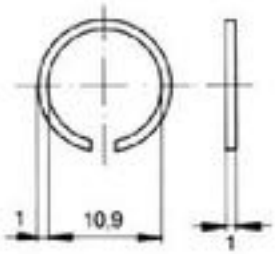

RETAINING RING

Heavy Duty Series

Part Number	Material
R4G	Steel, CAD Plated
40G26-1	Stainless
R4T (Hi Shear)	Alloy Steel, CAD Plated

PLIERS

P/N 4P3



Spencer Aircraft provides the information in this catalog for its customers as a ***reference only*** and it is not intended for design or guarantee of accuracy. Though it is our policy to ship all orders in a timely manner, Spencer Aircraft cannot guarantee that all items will be in stock at all times.

DZUS - Standard Line

Type "A" Oval Head, Hardened Carbon Steel, Zinc Plated

AJ4-#			AJ5-#			AJ6-#		
Dash Number	Dimension B	Dimension L	Dash Number	Dimension B	Dimension L	Dash Number	Dimension B	Dimension L
25	.100	.250	30	.125	.300	35	.150	.350
30	.100	.300	40	.190	.400	40	.190	.400
35	.150	.350	50	.250	.500	50	.250	.500
40	.200	.400	60	.300	.600	60	.300	.600
45	.225	.450						
50	.250	.500						

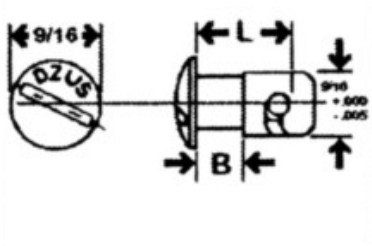

DZUS STUD - Standard Line, Wing

Type "A" Oval Head, Hardened Carbon Steel, Zinc Plated

AJ4W-#			AJ5W-#			AJ6W-#		
Dash Number	Dimension B	Dimension L	Dash Number	Dimension B	Dimension L	Dash Number	Dimension B	Dimension L
25	.100	.250	30	.125	.300	35	.150	.350
30	.100	.300	40	.190	.400	40	.190	.400
35	.150	.350	50	.250	.500	50	.250	.500
40	.200	.400	60	.300	.600			
45	.225	.450						
50	.250	.500						

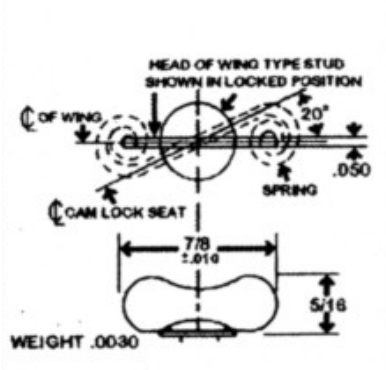

DZUS GROMMETS - Standard Line

Type GA - for Use on Type "A" Oval HD Studs, Aluminum Natural Finish, Full Grommet

GA4-#	
Dash Number	Panel Thickness
225	.015-.025
250	.026-.050
275	.051-.075
300	.076-.100

GA5-#	
Dash Number	Panel Thickness
312	.031-.062
350	.063-.094
375	.095-.125

GA6-#	
Dash Number	Panel Thickness
350	.040-.065
375	.066-.100
425	.101-.135

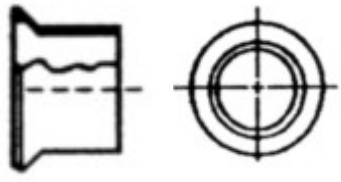

DZUS SNAP RING

For Use on All 4, 5, and 6 Sized Standard Studs, Carbon Spring Steel, Zinc Plated

SR4	SR5	SR6

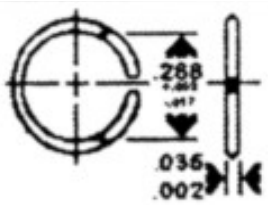

DZUS SPRING RECEPTACLE

Carbon Steel Music Wire, Zinc Plate for Use With Types AJ4, AJ5, and AJ6 Oval Head

S4A	
Dash Number	Dimension H
200	.200
225	.225
250	.250
275	.275

S5A	
Dash Number	Dimension H
200	.200
225	.225
250	.250
275	.275

S6A	
Dash Number	Dimension H
225	.225
250	.250
275	.275
300	.300

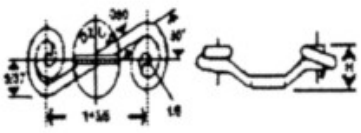

Spencer Aircraft provides the information in this catalog for its customers as a ***reference only*** and it is not intended for design or guarantee of accuracy. Though it is our policy to ship all orders in a timely manner, Spencer Aircraft cannot guarantee that all items will be in stock at all times.

DZUS

Quick-Acting Fasteners

Material Type	Model	A	B	L	Grommets & Snap Rings	Springs	Cat #
Zinc Electroplated	121J-325-Z3C	0.188	0.075	0.250	GA3-175, 200, 250 GP3B, GH3 SR3SS, SX-520SS	S3-150, 175 200, 225	AJ3-25
	121J-330-Z3C		0.100	0.300			AJ3-30
	121J-335-Z3C		0.150	0.350			AJ3-35
	121J-340-Z3C		0.200	0.400			AJ3-40
	121J-425-Z3C	0.250	0.100	0.250	GA4-225, 250, 275, 300 GP4B, GH4 SR4SS SX-523SS	S4-200, 255	AJ4-25
	121J-430-Z3C		0.100	0.300			AJ4-30
	121J-435-Z3C		0.150	0.350			AJ4-35
	121J-440-Z3C		0.200	0.400			AJ4-40
	121J-445-Z3C		0.225	0.450			AJ4-45
	121J-450-Z3C		0.250	0.500			AJ4-50
	121J-530-Z3C	0.313	0.125	0.300	GA5-312, 350, 375 GP5B, GH5 SR5SS SX-510SS	S5A200, 225, 250, 275	AJ5-30
	121J-535-Z3C		0.125	0.350			AJ5-35
	121J-540-Z3C		0.190	0.400			AJ5-40
	121J-545-Z3C		0.190	0.450			AJ5-45
	121J-550-Z3C		0.250	0.500			AJ5-50
	121J-560-Z3C		0.300	0.600			AJ5-60
	121J-570-Z3C		0.400	0.700			AJ5-70
	121J-635-Z3C	0.375	0.150	0.350	GA6-350, 375, 425 GP6B, GH6 SR6SS SX-518SS	S6-225, 250, 275, 300	AJ6-35
	121J-640-Z3C		0.190	0.400			AJ6-40
	121J-650-Z3C		0.250	0.500			AJ6-50
	121J-660-Z3C		0.300	0.600			AJ6-60
	121J-670-Z3C		0.350	0.700			AJ6-70
	121J-740-Z3C	0.438	0.190	0.400	GA7-375, 475, 525 GH7 SR7SS SR7SS SX-519SS	S7-225, 250, 275, 300	AJ7-40
	121J-750-Z3C		0.250	0.500			AJ7-50
	121J-770-Z3C		0.350	0.700			AJ7-70
Stainless Steel	121J-335-SS	0.188	0.150	0.350	SR3SS		AJ3-35SS
	121J-425-SS	0.250	0.100	0.250	GA4-225, 250, 275, 300 GP4B, GH4 SB4SS SX-523SS	S4-200, 255	AJ4-25SS
	121J-430-SS		0.100	0.300			AJ4-30SS
	121J-435-SS		0.150	0.350			AJ4-35SS
	121J-440-SS		0.200	0.400			AJ4-40SS
	121J-530-SS	0.313	0.125	0.300	GA5-312, 350, 375 GP5B, GH6 SR5SS	S5A200 225 250 275	AJ5-30SS
	121J-535		0.125	0.350			AJ5-35SS
	121J-540		0.190	0.400			AJ5-40SS

FAST FASTENERS

Self-Ejecting 1/4”-Turn Type EHF

EHF5-5



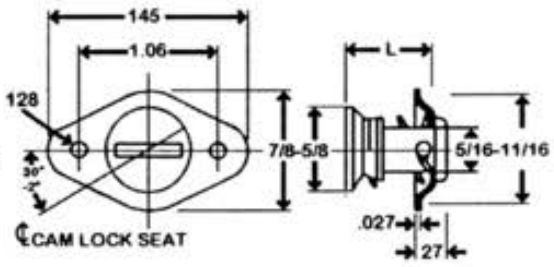

Self-ejecting fasteners provide Dzus 1/4-turn action with studs that eject from receptacles when opened.

Ejected studs won’t hang up when sliding or curbed panels are removed and give visual signal of unlocked fastener.

Stud assembly is riveted to panel. Assembly material is steel, Cadmium plated, with clear chromate finish.

X945-360

Type X945 weld plates have pre-riveted S5A springs, and are secured to support by welding, or with rivets or screws.

Extra plate length allows for bending to fit a wide range of applications.

Weld plates are un-plated steel.



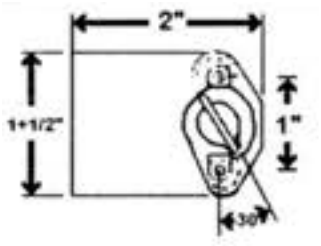



Spencer Aircraft provides the information in this catalog for its customers as a ***reference only*** and it is not intended for design or guarantee of accuracy. Though it is our policy to ship all orders in a timely manner, Spencer Aircraft cannot guarantee that all items will be in stock at all times.

TUBING

Seamless Rigid Tubing



Example Part Number: 5052-1/4x.035

Rigid 5052-0 aluminum alloy tubing is used for low and medium pressure hydraulic systems, fuel lines and oil lines. This tubing will withstand a higher pressure than 3003-0 tubing.

Part Number	Wall Thickness Options:			Material	Outside Diameter
5052-1/8	0.028	0.035	0.049	5052-0, Aluminum	1/8
5052-3/16	0.028	0.035	0.049	5052-0, Aluminum	3/16
5052-1/4	0.028	0.035	0.049	5052-0, Aluminum	1/4
5052-5/16	0.028	0.035	0.049	5052-0, Aluminum	5/16
5052-3/8	0.028	0.035	0.049	5052-0, Aluminum	3/8
5052-1/2	0.028	0.035	0.049	5052-0, Aluminum	1/2
5052-5/8	0.028	0.035	0.049	5052-0, Aluminum	5/8
5052-3/4	0.028	0.035	0.049	5052-0, Aluminum	3/4
5052-1	0.028	0.035	0.049	5052-0, Aluminum	1

MANUAL ROTARY FLARING TOOL

212-FB or #212FB

Parker Rolo-Flair® creates precision burnished 37° and 45° flares on copper and aluminum tube in sizes of 1/8” thru 3/4” OD





Spencer Aircraft provides the information in this catalog for its customers as a ***reference only*** and it is not intended for design or guarantee of accuracy. Though it is our policy to ship all orders in a timely manner, Spencer Aircraft cannot guarantee that all items will be in stock at all times.

Hydraulic Fittings

Primer / Oxygen, Weld Bungs, Hose Nipples

Primer / Oxygen For Tube O.D.	Material		
	Brass	Brass	Cres
	Plated	Unplated	Unplated
1/8	P2	-2	C2
3/16	P3	-3	C3
1/4	P4	-4	C4

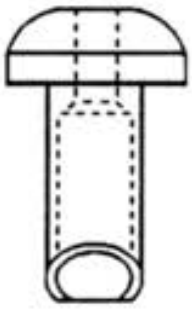

AN800

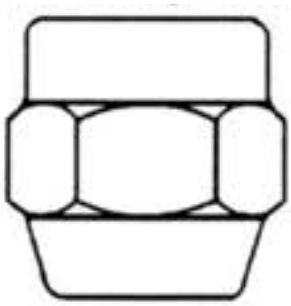

AN805

AN867, Welding Bung, Pipe Threads

NPT Size	Material		Flange Diameter	Height (Not Shown)	Boss dia. Aluminum	Boss dia. Steel
	Aluminum	Steel				
1/8	-1	-1S	1-1/2	7/16	27/32	23/32
1/4	-2	-2S	1-3/4	5/8	1	7/8
3/8	-3	-3S	1-7/8	5/8	1-7/32	1-1/16
1/2	-4	-4S	2	3/4	1-19/32	1-11/32
3/4	-6	-6S	2-1/4	13/16	1-13/16	1-5/8

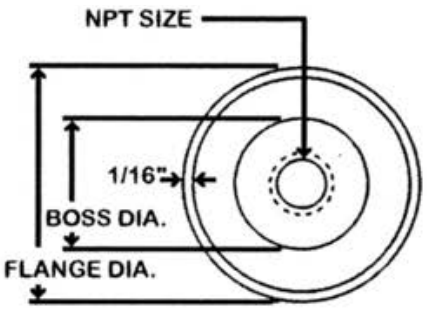

AN871, Welding Bung, Straight Threads

TUBE OD Size	Material		Flange Diameter	Height (Not Shown)	Boss dia. Aluminum	Boss dia. Steel
	Aluminum	Steel				
1/4	-4D	-4	1-7/16	.593	.750	7/16-20
3/8	-6D	-6	1-9/16	.593	.875	9/16-18
1/2	-8D	-8	1.-3/4	.687	1.062	3/4-16
5/8	-10D	-10	1-7/8	.750	1.187	7/8-14
3/4	-12D	-12	2	.906	1.437	1-1/16-1
1	-16D	-16	2-1/4	.937	1.687	1-12
1-1/4	-20D	-20	2-5/8	.984	2	1-5/8-12
1-1/2	-24D	-24	2-7/8	1.125	2.250	1-7/8-12

Straight Threads with O-Ring Seat

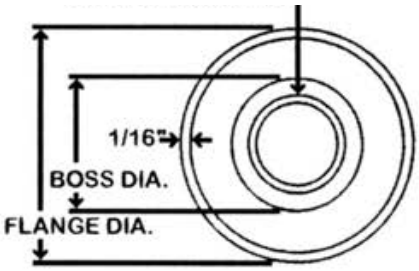

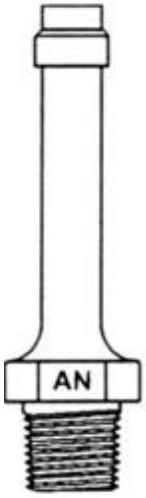

AN840
Straight

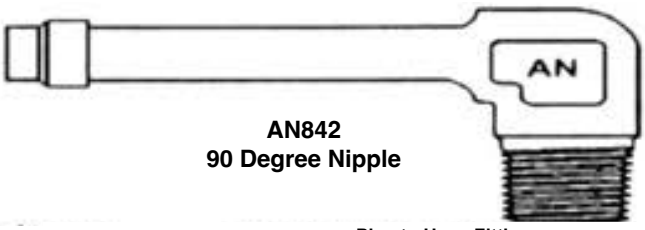

AN842
90 Degree Nipple

Pipe to Hose Fitting

NPT Male	Hose I.D.	Material	
		Aluminum	Brass
1/8	1/4	-4D	-4
1/4	3/8	-6D	-6
3/8	1/2	-8D	-8
1/2	5/8	-10D	-10
3/4	3/4	-12D	-12
	1	-16D	-16

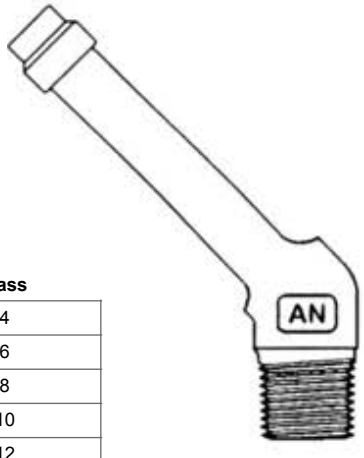

AN844
45 Degree Nipple

Spencer Aircraft provides the information in this catalog for its customers as a ***reference only*** and it is not intended for design or guarantee of accuracy. Though it is our policy to ship all orders in a timely manner, Spencer Aircraft cannot guarantee that all items will be in stock at all times.

CROSS REFERENCE NUMBERS

Part Number	Cross Reference	2nd Cross Reference	Title Nomenclature
AN774	AS5160		Bolt, Flared Tube Fitting End
AN775	AS5161		Bolt, Fluid Passage
AN776	AS5162		Connector, Banjo FTG, Press Line 90°
AN777	AS5163		Connector, Banjo FTG, Press Line 75°
AN778	AS5164		Connector, Banjo FTG, Press Line 45°
AN779	AS5165		Connector, Banjo FTG, Press Line Straight
AN780	INACTIVE		Nipple, Union
AN783	AS1031	MS24388	Tee, Flared Tube, Internal Thread on side
AN784	AS1032	MS24389	Tee, Flared Tube, Internal Thread on Run
AN785	INACTIVE		Coupling, Union, Brazing
AN786	INACTIVE		Coupling, Airspeed Tube Union, Brazing
AN790	CANCELED		Elbow, Union
AN791	INACTIVE		Elbow, Union, 45°
AN792	MS28740	MS24587	Adapter, Straight, Tube to Hose - Reusable
AN795	INACTIVE		Tee, Union
AN800	INACTIVE		Cone & Union
AN801	CANCELED		Connection, Straight Flanged Hose
AN802	CANCELED		Connection, 45°, Flanged Hose
AN803	CANCELED		Connection, 90°, Flanged Hose
AN804	AS1033	MS24390	Tee, Flared Tube, Bulkhead on Run
AN806	AS5168	MS24404	Plug, Flared Tube
AN807	AS5180		Adapter, Straight, Tube to Hose
AN814	AS5169	MS24391	Plug & Bleeder
AN815	AS5174	MS24392	Union, Flared Tube
AN816	AS5194		Adapter, Union, Straight Pipe to Tube
AN818	AS5175		Nut, Tube Coupling, Short
AN821	AS1034	MS24401	Elbow, Flared Tube 90°
AN824	AS1035	MS24402	Tee, Flared Tube
AN825	AS5197	MS20825	Tee, Flared Tube, Pipe Thread on Side
AN826	AS5198	MS20826	Tee, Flared Tube, Pipe Thread on Run
AN827	AS1036	MS24403	Cross, Flared Tube
AN832	AS5406	MS24393	Union, Flared Tube to Bulkhead
AN833	AS1038	MS24394	Elbow, Flared Tube & Bulkhead 90°
AN834	AS1039	MS24395	Tee, Bulkhead & Flared Tube
AN837	AS1040	MS24396	Elbow, Flared Tube 45°
AN838	AS5181		Elbow, Tube to Hose 90°
AN839	AS5182		Elbow, Tube to Hose 45°
AN840	AS5183		Adapter, Straight Pipe to Hose
AN841	AS5184		Adapter, Hose to Flared Tube
AN842	AS5185		Elbow, Pipe to Hose 90°
AN844	AS5186		Elbow, Pipe to Hose 45°
AN846	AS5187		Elbow, Hose, 45°
AN848	AS5188		Elbow, Hose 90°
AN849	AS5189		Nipple, Hose
AN871	AS5227		Flange & Straight Thread Boss, Welding
AN893	AS5172	MS24397	Bushing-Screw Thread Reducer
AN894	AS5173	MS24398	Bushing-Screw Thread Expander
AN910	AS4859		Coupling, Pipe
AN911	AS4860		Nipple, Pipe
AN912	AS4861		Bushing, Pipe
AN914	AS4854		Elbow, Pipe, Internal & Enternal Thread, 90°
AN915	AS4855		Elbow, Pipe, 45°
AN916	AS4856		Elbow, Pipe, Internal Thread, 90°
AN917	AS4857		Tee, Pipe
AN918	AS4858		Cross, Pipe
AN919	AS5174	MS24399	Reducer, External Thread, Flared Tube
AN924	AS5178	MS24400	Nut, Tube, Bulkhead & Universal Fitting
AN929	AS5177		Cap Assembly, Tube Pressure Seal
AN933	AS4862		Plug, Pipe, Hex head
AN937	AS5193		Cross, Tube Internal Thread
AN938	AS5192		Tee, Tube, Internal Thread
AN939	AS5190		Elbow, Tube Internal Thread, 90°
AN941	AS5191		Elbow, Tube, Internal Thread, 45°
AN6289	AS5179		Nut, Tube
MS20819	AS5176		Sleeve, Flared Tube Fittings
MS20822	AS5195		Elbow, Flared Tube & Pipe, 90°
MS20823	AS5196		Elbow, 45° Pipe to Flared
MS20825	AS5197	(OLD AN825)	Tee, Pipe to Tube, Pipe Thread on Side
MS20826	AS5198	(OLD AN826)	Tee, Pipe to Tube, Pipe Thread on Run
MS20913	AS4863		Plug, Pipe, Square Head
MS21900	AS21900	AS5238	Adapter, Flareless Tube to a Flared Tube
MS21902	AS21902	AS5230	Union, Flareless Tube
MS21904	AS21904		Elbow, Flareless Tube 90°
MS21905	AS21905		Tee, Flareless Tube
MS21906	AS21906		Cross, Flareless Tube
MS21907	AS21907		Elbow, Bulkhead Universal, 45°, Flareless Tube
MS21908	AS21908		Elbow, Bulkhead Universal, 90°, Flareless Tube
MS21909	AS21909		Tee, Bulkhead & Universal, Flareless Tube
MS21910	AS21910		Tee, Bulkhead, Flareless Tube, Internal Thread On Side
MS21911	AS21911		Tee, Bulkhead, Flareless Tube, Internal Thread On Run
MS21912	AS21912		Tee, Flareless Tube with Bulkhead on Run
MS21913	AS21913	AS5231	Plug, Flareless Tube
MS21914	AS21914		Cap, Pressure Seal, Flareless Tube Fitting
MS21915	AS21915	AS5232	Adapter, Straight, Tube to Boss
MS21916	AS21916	AS5230	Reducer, External Thread, Flareless Tube
MS21921	AS21921		Nut, Sleeve, Coupling Flareless
MS21922	AS21922		Sleeve, Coupling, Flareless
MS21924	AS21924		Union, Flareless Tube, Bulkhead & Universal
MS21925	AS21925		Elbow, 90° Universal, Flareless Tube, High Profile
MS21926	AS21926		Elbow, 90° Universal, Flareless Tube, Low Profile
MS27073	AS4370		Nut, Tube Coupling - Swivel
MS27074	AS1791		Wire, Retainer

Spencer Aircraft provides the information in this catalog for its customers as a ***reference only*** and it is not intended for design or guarantee of accuracy. Though it is our policy to ship all orders in a timely manner, Spencer Aircraft cannot guarantee that all items will be in stock at all times.

HYDRAULIC FITTINGS

Adapters - 37 Degree Flare - JIC

Tube Size	MATERIAL		
	Aluminum	Steel	Stainless
1/8	-2D	-2	-2J
3/16	-3D	-3	-3J
1/4	-4D	-4	-4J
5/16	-5D	-5	-5J
3/8	-6D	-6	-6J
1/2	-8D	-8	-8J
5/8	-10D	-10	-10J
3/4	-12D	-12	-12J
1	-16D	-16	-16J

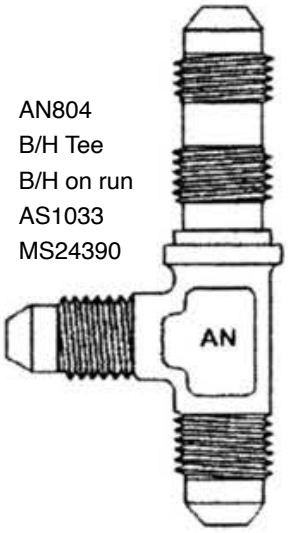

AN804
B/H Tee
B/H on run
AS1033
MS24390

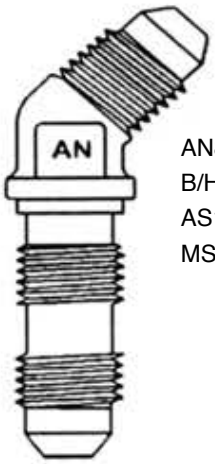

AN837
B/H 45
AS1040
MS24396



AN924
Bulkhead Nut
AS5178
MS2440

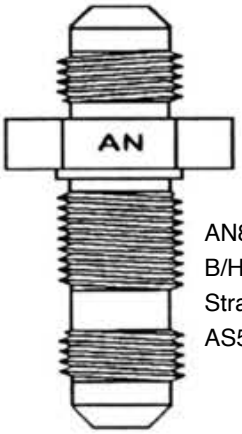

AN832
B/H
Straight
AS5406

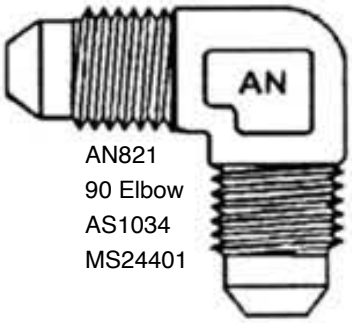

AN821
90 Elbow
AS1034
MS24401

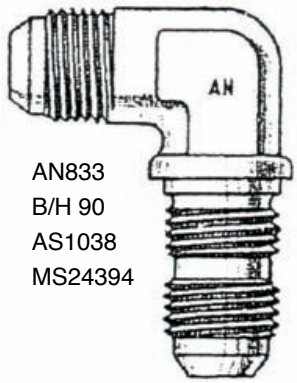

AN833
B/H 90
AS1038
MS24394

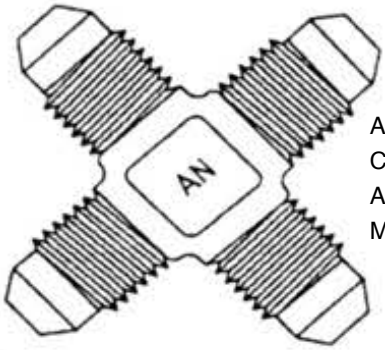

AN827
Cross
AS1036
MS24403

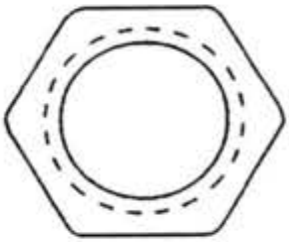

AN814
Plug & Bleeder
AS5169
MS24391

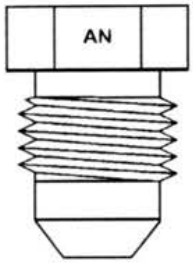

AN806
Pressure Plug
AS5168
MS24404

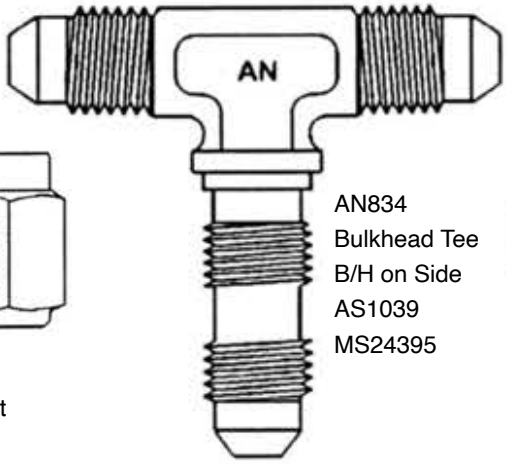

AN834
Bulkhead Tee
B/H on Side
AS1039
MS24395

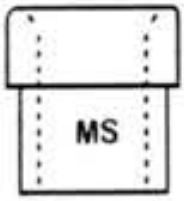

MS20819
Sleeve
AS5176

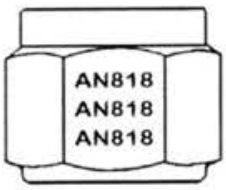

AN818
Tube Nut

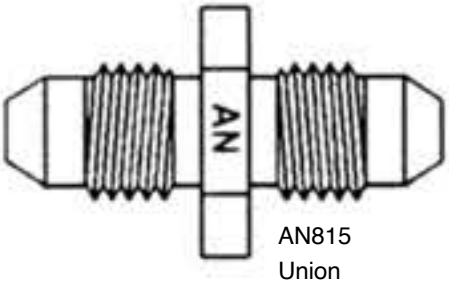

AN815
Union
AS5174
MS24392

Spencer Aircraft provides the information in this catalog for its customers as a ***reference only*** and it is not intended for design or guarantee of accuracy. Though it is our policy to ship all orders in a timely manner, Spencer Aircraft cannot guarantee that all items will be in stock at all times.

Adapters - Pipe to 37 Degree Flare - JIC

AN816 - Pipe to Flare - Straight

Pipe Size	Tube Size	MATERIAL		
		Aluminum	Steel	Stainless
1/8	1/8	-2D	-2	-2J
1/8	3/16	-3D	-3	-3J
1/8	1/4	-4D	-4	-4J
1/4	1/4	-4-4D	-4-4	-4-4J
1/8	5/16	-5D	-5	-5J
1/4	5/16	-5-4D	-5-4	-5-4J
1/8	3/8	-6-2D	-6-2	-6-2J
1/4	3/8	-6D	-6	-6J
3/8	3/8	-6-6D	-6-6	-6-6J
1/4	1/2	-7D	-7	-7J
3/8	1/2	-8D	-8	-8J
1/2	5/8	-10D	-10	-10J
3/4	5/8	-10-12D	-10-12	-10-12J
1/2	3/4	-12-8D	-12-8	-12-8J
3/4	3/4	-12D	-12	-12J
1	3/4	-12-16D	-12-16	-12-16J
3/4	1	-16-12D	-16-12	-16-12J
1	1	-16D	-16	-16J

AN816
AS5194

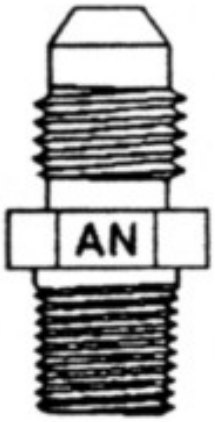

MS20822 - Pipe to Flare - 90 Degrees

Pipe Size	Tube Size	MATERIAL		
		Aluminum	Steel	Stainless
1/8	1/8	-2D	-2	-2J
1/8	3/16	-3D	-3	-3J
1/8	1/4	-4D	-4	-4J
1/4	1/4	-4-4D	-4-4	-4-4J
1/8	5/16	-5D	-5	-5J
1/4	5/16	-5-4D	-5-4	-5-4J
1/8	3/8	-6-2D	-6-2	-6-2J
1/4	3/8	-6D	-6	-6J
3/8	3/8	-6-6D	-6-6	-6-6J
1/4	1/2	-7D	-7	-7J
3/8	1/2	-8D	-8	-8J
1/2	5/8	-10D	-10	-10J
3/4	5/8	-10-12D	-10-12	-10-12J
1/2	3/4	-12-8D	-12-8	-12-8J
3/4	3/4	-12D	-12	-12J
1	3/4	-12-16D	-12-16	-12-16J
3/4	1	-16-12D	-16-12	-16-12J

MS20826
AN826
AS5198

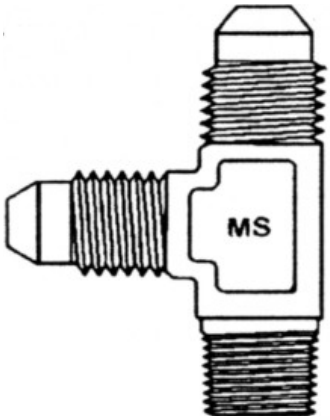

MS20825
AN825
AS5197

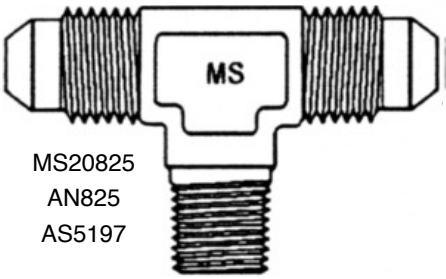

MS20822
AN822
AS5195

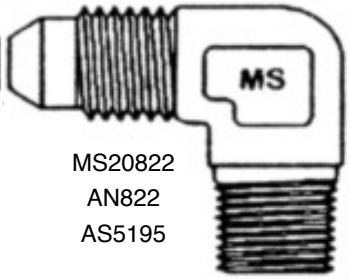

MS20823 - Pipe to Flare - 45 Degree

Pipe Size	Tube Size	MATERIAL		
		Aluminum	Steel	Stainless
1/8	1/8	-2D	-2	-2J
1/8	3/16	-3D	-3	-3J
1/8	1/4	-4D	-4	-4J
1/8	5/16	-5D	-5	-5J
1/4	3/8	-6D	-6	-6J
3/8	1/2	-8D	-8	-8J
1/2	5/8	-10D	-10	-10J
3/4	3/4	-12D	-12	-12J
3/4	1	-16-12D	-16-12	-16-12J
1	1	-16D	-16	-16J

MS20823
AN823
AS5196

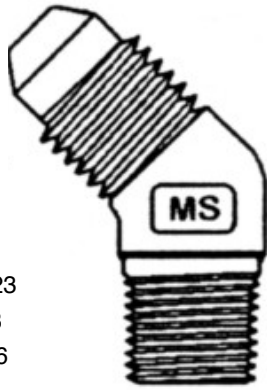

253-848-9349
SpencerAircraft.com

Spencer Aircraft provides the information in this catalog for its customers as a ***reference only*** and it is not intended for design or guarantee of accuracy. Though it is our policy to ship all orders in a timely manner, Spencer Aircraft cannot guarantee that all items will be in stock at all times.

One Size to Another

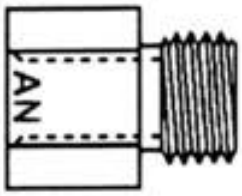

AN893, AS5172, MS24397
Female Straight to Male Straight
Both portions to be sealed with boss O-ring or metal gasket

TUBE SIZE		MATERIAL		
Female	Male	Aluminum	Steel	Stainless
1/4	5/16	-1D	-1	-1J
	3/8	-2D	-2	-2J
	1/2	-3D	-3	-3J
	5/8	-31D	-31	-31J
5/16	3/8	-7D	-7	-7J
	1/2	-8D	-8	-8J
	5/8	-81D	-81	-81J
3/8	1/2	-12D	-12	-12J
	5/8	-121D	-121	-121J
	3/4	-13D	-13	-13J
Larger sizes available by phone order				

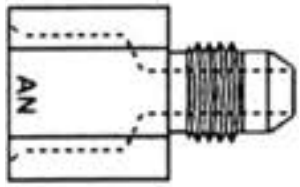

AN894, AS5173, MS24398
Female Straight to Male 37 Degree
female portion to be sealed with boss O-ring or metal gasket

TUBE SIZE		MATERIAL		
Female	Male	Aluminum	Steel	Stainless
3/16	1/8	D-3-2	-3-2	J-3-2
1/4	1/8	D-4-2	-4-2	J-4-2
	3/16	D-4-3	-4-3	J-4-3
5/16	1/4	D-5-4	-5-4	J-5-4
3/8		D-6-4	-6-4	J-6-4
	5/16	D-6-5	-6-5	J-6-5
1/2	1/4	D-8-4	-8-4	J-8-4
	5/16	D-8-5	-8-5	J-8-5
	3/8	D-8-6	-8-6	J-8-6
Larger sizes available by phone order				



AN912, AS4861
Pipe to Pipe Busing Reducer

PIPE SIZE		MATERIAL		
Male	Female	Aluminum	Steel	Stainless
1/4	1/8	-1D	-1	-1J
3/8	1/4	-2D	-2	-2J
	1/8	-3D	-3	-3J
1/2	3/8	-4D	-4	-4J
	1/4	-5D	-5	-5J
	1/8	-6D	-6	-6J
3/4	1/2	-7D	-7	-7J
	3/8	-8D	-8	-8J
	1/4	-9D	-9	-9J
1	3/4	-10D	-10	-10J
	1/2	-11D	-11	-11J
	3/8	-12D	-12	-12J
1-1/4	3/4	-13D	-13	-13J

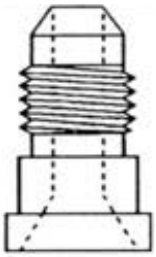

NAS1564
Female 37 Degree to Male 37 Degree

use with AN818 nut of same size and material as female tube size

TUBE SIZE		MATERIAL		
Female	Male	Aluminum	Steel	Stainless
3/8	1/4	-6-4D	-6-4	-6-4J
1/2		-8-4D	-8-4	-8-4J
	3/8	-8-6D	-8-6	-8-6J
5/8		-10-6D	-10-6	-10-6J
3/4	1/2	-12-8D	-12-8	-12-8J
Larger sizes available by phone order				

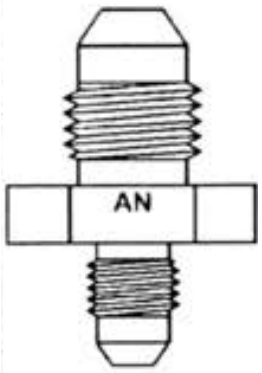

AN919, AS5174, MS24399
Male to Male 37 Degree Flare

TUBE SIZE		MATERIAL		
Female	Male	Aluminum	Steel	Stainless
3/16	1/8	-0D	-0	-0J
1/4		-1D	-1	-1J
	3/16	-2D	-2	-2J
5/16	1/4	-3D	-3	-3J
3/8	1/8	-4D	-4	-4J
	3/16	-5D	-5	-5J
	1/4	-6D	-6	-6J
	5/16	-7D	-7	-7J
1/2	1/8	-8D	-8	-8J
	3/16	-9D	-9	-9J
	1/4	-10D	-10	-10J
	5/16	-11D	-11	-11J
	3/8	-12D	-12	-12J
5/8	1/4	-13D	-13	-13J
	3/8	-14D	-14	-14J
	1/2	-15D	-15	-15J
3/4	1/4	-16D	-16	-16J
	5/16	-17D	-17	-17J
	3/8	-18D	-18	-18J
	1/2	-19D	-19	-19J
	5/8	-20D	-20	-20J
1	1/4	-21D	-21	-21J
	5/8	-22D	-22	-22J
	3/4	-23D	-23	-23J

Spencer Aircraft provides the information in this catalog for its customers as a ***reference only*** and it is not intended for design or guarantee of accuracy. Though it is our policy to ship all orders in a timely manner, Spencer Aircraft cannot guarantee that all items will be in stock at all times.

HYDRAULIC FITTINGS

Pipes - Plugs & Unions

MS27769 Hex Plug

Replaces AN932



NPT	MATERIAL		
	Aluminum	Steel	Cres.
1/16	-1D	-1	-1S
1/8	-2D	-2	-2S
1/4	-3D	-3	-3S
3/8	-4D	-4	-4S
1/2	-5D	-5	-5S
3/4	-6D	-6	-6S
1	-7D	-7	-7S

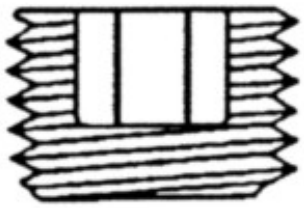

MS20913 Square Plug

Replaces AN913, AS4863

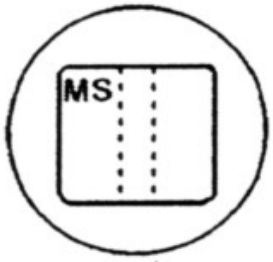

NPT	MATERIAL		
	Aluminum	Steel	Cres.
1/16	-0D	-0	-0J
1/8	-1D	-1	-1J
1/4	-2D	-2	-2J
3/8	-3D	-3	-3J
1/2	-4D	-4	-4J
3/4	-6D	-6	-6J
1	-8D	-8	-8J
1-1/4	-10D	-10	-10J

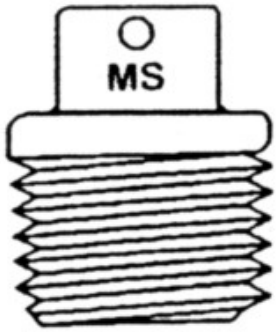

The information in this table applies to the fittings illustrated below

NPT	MATERIAL		
	Aluminum	Steel	Cres.
1/16	-0D	-0	-0J
1/8	-1D	-1	-1J
1/4	-2D	-2	-2J
3/8	-3D	-3	-3J
1/2	-4D	-4	-4J
3/4	-6D	-6	-6J
1	-8D	-8	-8J

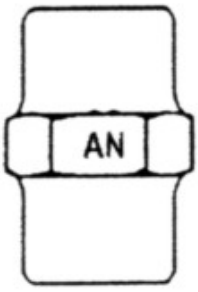

AN910
AS4859
Female
Straight

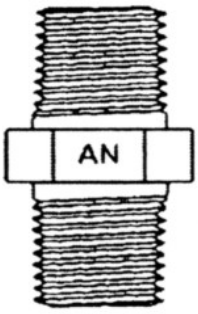

AN911
AS4860
Male
Straight

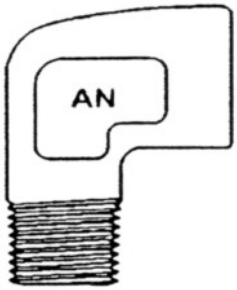

AN914
AS4854
M/F 90 Degree

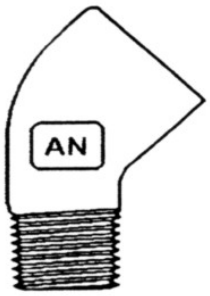

AN915
AS4855
M/F 45 Degree

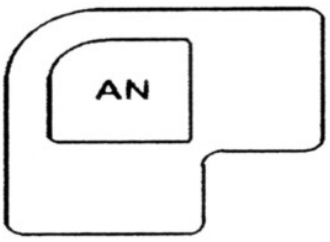

AN916
AS4856
Female
90 Degree

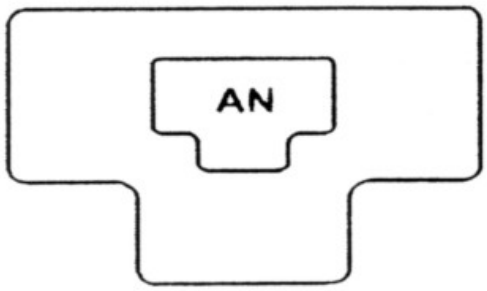

AN917
AS4857
Female Tee

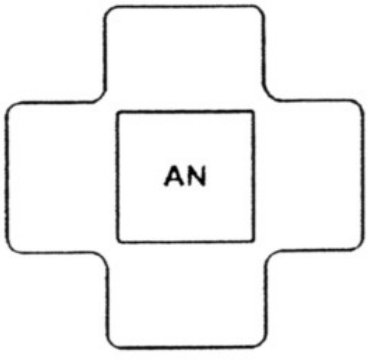

AN918
AS4858
Female Cross

253-848-9349
SpencerAircraft.com

Spencer Aircraft provides the information in this catalog for its customers as a ***reference only*** and it is not intended for design or guarantee of accuracy. Though it is our policy to ship all orders in a timely manner, Spencer Aircraft cannot guarantee that all items will be in stock at all times.

AN814, AS5169, MS24391, Plug Straight Threads, O-Ring Sealing Type

Tube Size	Thread Size	MATERIAL Aluminum	Steel	Stainless
1/8	5/16-24	-2D	-2	-2J
3/16	3/8-24	-3D	-3	-3J
1/4	7/16-20	-4D	-4	-4J
5/16	1/2-20	-5D	-5	-5J
3/8	9/16-18	-6D	-6	-6J
1/2	3/4-16	-8D	-8	-8J
5/8	7/8-14	-10D	-10	-10J
3/4	1-1/16-12	-12D	-12	-12J
1	1-5/16-12	-16D	-16	-16J

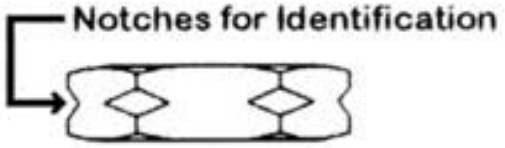

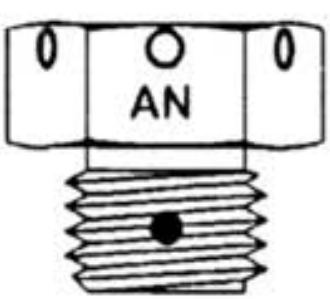

AN814 Bleeder Plug
add an “L” at the end for
lock wire holes

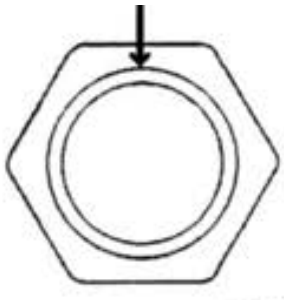

AN6289 B/H NUT

Fittings, Straight Threads, O-Ring Sealing Type

Tube Size	Thread Size	MATERIAL Aluminum	Steel	Stainless
1/4	7/16-20	-4D	-4	-4J
5/16	1/2-20	-5D	-5	-5J
3/8	9/16-18	-6D	-6	-6J
1/2	3/4-16	-8D	-8	-8J
5/8	7/8-14	-10D	-10	-10J
3/4	1-1/16-12	-12D	-12	-12J
1	1-5/16-12	-16D	-16	-16J

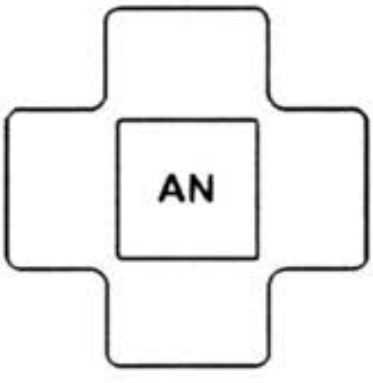

AN937
AS4862
Straight Thread Cross

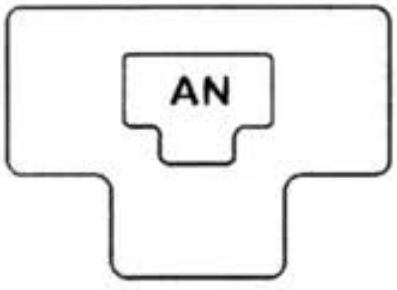

AN938
AS5192
Straight Thread Tee

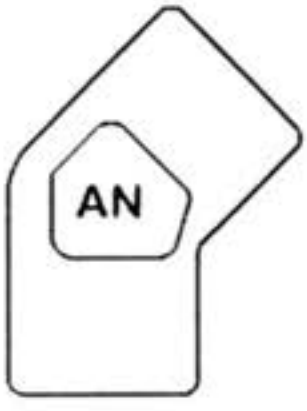

AN941
AS5191
Straight Elbow 45

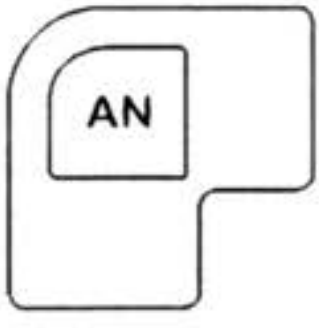

AN939
AS5190
Straight Thread Elbow 90

Spencer Aircraft provides the information in this catalog for its customers as a ***reference only*** and it is not intended for design or guarantee of accuracy. Though it is our policy to ship all orders in a timely manner, Spencer Aircraft cannot guarantee that all items will be in stock at all times.

QUICK DRAIN FUEL VALVE

Saf-Air

CAV170 CAV160 CAV180 CAV110

STEEL

TYPE 2 CLAS 2 CAD PLATING

Model Number	Thread Type	For Use On:
CAV170	7/16-20 Screw	Late Model CES140 All Models CES 150, 170, 172, and 175 Any Aircraft with 7/16-20 Fuel Port
CAV160	1/4 Pipe	Piper PA11, PA12, PA18, PA20, and PA22 Apache Aeronca Champ Early Model Cessna 140, Cessna 120 Any Aircraft with 1/4 Pipe Fuel Port
CAV180	3/8-24 Screw	Cessna 180, 182, 190, 195, 210 AND 310 AUX Any Aircraft with 3/8-24 Fuel Port
CAV110	1/8 Pipe	Cessna 310 Tip Tanks Mooney MIL20 and 20A Ercoupe T-Craft Bellanca Stinson Any Aircraft with 1/8 Pipe Fuel Port





Curtis Drain Valves

Part Number	Thread Size
CCA1550	1/8 Pipe Thread
CCA1600	1/4 Pipe Thread
CCA1650	3/8 Pipe Thread

Brackett Aero Filters, Inc.



- FAA-PMA approved – 88 different models.
- Treated foam is highly efficient at filtering.
- You only replace the low cost throwaway element.
- Easy servicing.
- Distributed by major aircraft suppy houses and readily available to all FBOs.
- Dual stage foam element increases dust holding capacity.
- Foam filter is approved for sea planes. It has no pleats to store dirt and is abrasive resistant.

IN A DIRTY WORLD, SPENCER AIRCRAFT IS A BREATH OF FRESH AIR!

Spencer Aircraft provides the information in this catalog for its customers as a ***reference only*** and it is not intended for design or guarantee of accuracy. Though it is our policy to ship all orders in a timely manner, Spencer Aircraft cannot guarantee that all items will be in stock at all times.

MS27404

Low Pressure-Tube to Hose Straight-Reusable Adapter

For MIL-H-5593 Hose

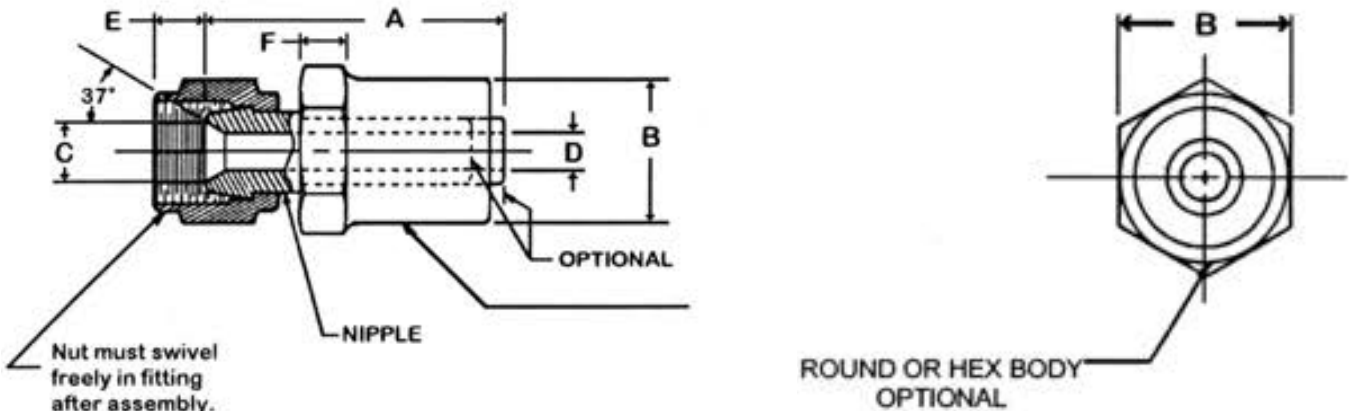

MS27404

Low Pressure, Tube to Hose Straight, Reusable Adapter

For MIL-H-5593 Hose

MS Part No.	Tubing O.D.	A Max	B Max	C +005 -.000	D Min	E +1/64, -0	F Min	Nut
MS27404-2D	1/8	1-5/32	1/2	.189	.052	21/64	3/16	AN818-2D
MS27404-3D	3/16	1-7/32	9/16	.245	.109	5/16	3/16	AN818-3D
MS27404-4D	1/4	1-1/4	5/8	.295	.156	11/32	3/16	AN818-4D
MS27404-6D	3/8	1-5/8	13/16	.435	.281	3/8	1/4	AN818-6D
MS27404-8D	1/2	1-3/4	1	.570	.6375	27/64	1/4	AN818-8D
MS27404-10D	5/8	1-7/8	1-1/8	.690	.453	1/2	5/16	AN818-10D



MILITARY HOSE / STRATOFLEX (PH) / AEROQUIP (AE) CROSS REFERENCE LIST

Military Specification / Standard		Stratoflex Part Number			
AS 604	(Formerly MIL-H-38360)	170	*	+	(Q)
AS 614	(Similar MIL-H-38390)	3164			TR1811
AS 620	(No MIL- Specification Equivalent)	3162			TR1798
AS 1339		171	*	+	(Q)
AS 1975		154			TR1870
ZZ-H-428		4144			TR1871
ZZ-H-461	Style A	4461/4462			(Q)
MIL-H-3992	Type I, Class I	4992			(Q)
MIL-H-5593		193			(Q)
MIL-H-6000		160			(Q)
MIL-H-8794	(MIL-H-8795)	111			(Q)
MIL-H-8788	(MIL-H-8789)	112			(Q)
MIL-H-27267	(MIL-H-25579) (Formerly MIL-H-38360)	124	*		(Q)
MIL-H-13444	Type I	208			(Q)
MIL-H-13444	Type III	243			(Q)
MIL-H-13531	Type IA	245			(Q)
MIL-H-13531	Type IA (Field Attachable Fittings Only)	421M			(Q)
MIL-H-13531	Type IB	421MNS			(Q)
MIL-H-13531	Type IIA	242			(Q)
MIL-H-13531	Type IIB	301MNS			(Q)
MIL-H-24135/1		212			(Q)
MIL-H-24135/2		214			(Q)
MIL-H-24135/10		225			(Q)
MIL-H-24136/3		4280			(Q)
MIL-H-52471/4		421			(Q)
MIL-H-52471/5	(100R2)	212			(Q)
MIL-H-62217	Type I	4144			TR1871
MIL-H-83298	(MIL-F-83296)	175			(Q)
MIL-H-83797/1	(MIL-F-83798) (MIL-F-83796)	156	*		(Q)
MIL-H-85800	(5000 psi)	158			TR1837

Notes: "TSO" and AS1055 Approvals available upon request
Confirm size range approved by (QPL)
(Q) Designates Qualified Product List (QPL)

* Available with integral silicone fire protection or integral polyester braid abrasion cover.

+ With "W" tube for MIL-H-26633

Bulk Hose Approvals (Navy)
MIL-H-24135/4 - 4265 (was 3297)
MIL-H-24135/5 - 4179
MIL-H-24135/10 (-40, -48 High Pressure - 4224 (was 5280)

STRATOFLEX (PH) Part Number:	AEROQUIP (AE) Part Number:
111	302A, 303 (depending on size)
112	309
156/157	601 w/NBR Tube
	AE701 w/AQP Tube
193	306
124	666, 667
170	676, 677, AE206, AE207
171	AE246, AE313
2650	624 (old), AE102 (new)
156H	AE401, AE402
156K	AE501, AE503
171H	AE446
171K	AE546
124H	AE466
124K	AE566

H - Silicone Extruded Cover
K - Blue Polyester Sleeving

Spencer Aircraft provides the information in this catalog for its customers as a ***reference only*** and it is not intended for design or guarantee of accuracy. Though it is our policy to ship all orders in a timely manner, Spencer Aircraft cannot guarantee that all items will be in stock at all times.

STRATOFLEX (PH) / AEROQUIP (AE)

FITTINGS	DASH #	TUBE SIZE OD	HOSE SIZE ID	HOSE SIZE OD	MAX HOSE PSI	HOSE TYPE	
AE 491 STRAIGHT	-3	3/16	0.125	0.453	3000	**303** MEDIUM PRESSURE **MIL-H-8794**	- 65° F TO + 250° F
	-4	1/4	0.188	0.516			
	-5	5/16	0.250	0.578			
	-6	3/8	0.313	0.672	2000		
	-8C						
	-10D	5/8	0.500	0.922	1750		
	-12D	3/4	0.625	1.078	1500		
AE 491 STRAIGHT	-4	1/4	0.188	0.516	3000	**602** MEDIUM PRESSURE SKYDROL	- 65° F TO + 250° F
	-5	5/16	0.250	0.578			
	-6	3/8	0.313	0.672	2000		
	-8D	1/2	0.406	0.766			
	-10D	5/8	0.500	0.922	1750		
	-12D	3/4	0.625	1.078	1500		
AE 451 STRAIGHT	-16D	1	0.875	1.234	800		
	-20D	1-1/7	1.125	1.500	600		

AE 451 STRAIGHT	-16D	1/4	0.875	1.234	800	**302A** MEDIUM PRESSURE **MIL-H-8794**	- 40° F TO + 250° F
	-20D	1-1/4	1.125	1.500	600		
	-24D	1-1/2	1.325	1.750	500		
	-32D	2	1.812	2.219	350		
	-40D	2-1/2	2.375	2.875	250		
	-48D	3	3.000	3.562	200		

FITTINGS	PART #	HOSE SIZE OD	COMPONENTS SOCKET	NIPPLE	NUT
AE 491 AE 451 MS24587 USE WITH HOSES: 302A 303 & 602	491-3	0.453	210-3D	251-3	290-3
	491-4	0.516	210-4D	251-4	290-4
	491-5	0.578	210-5D	251-5	290-5
	491-6	0.672	210-6D	251-6	290-6
	491-8C	0.797	215-8D	271-8D	290-8D
	491-10D	0.922	215-10D	271-10D	290-10D
	491-12D	1.078	215-12D	271-12D	290-12D
	451-16D	1.234	212-16D	251-16D	290-16D
	451-20D	1.500	212-20D	251-20D	290-20D
	451-24D	1.750	212-24D	251-24D	290-24D
	451-32D	2.219	212-32D	251-32D	290-32D
	451-40D	2.875	212-40D	251-40D	290-40D
	451-48D	3.562	212-48D	251-48D	270-48D

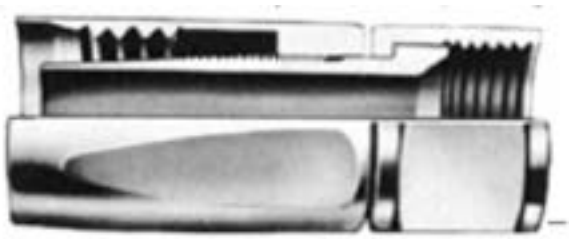



HOSES	PH DASH #	PART #	HOSE SIZE ID	HOSE SIZE OD	FLUID OPER. PSI	PROOF PSI	
AE 666 AE 667 PH 124	-3	AE116-3	0.125	0.250	1500	3000	**MIL-H-27267** - 65° F TO + 450° F
	-4	666-4	0.188	0.312			
	-5	666-5	0.250	0.375			
	-6	666-7	0.313	0.466			
	-8	666-8	0.406	0.562			
	-10	666-10	0.500	0.656			
	-12	666-12	0.625	0.789	1000	2500	
	-16	667-16	0.875	1.109	1250		
	-20	667-20	1.125	1.359	1000	2000	
	-24	667-24	1.375	1.672			



	DASH #	TUBE SIZE OD	HOSE SIZE ID	HOSE SIZE OD	FLUID OPER. PSI	PROOF PSI	
AE 246 PH 171	-4	1/4	0.212	0.390	3000	6000	**MIL-H-38360A** - 67° F TO + 400° F
	-6	3/8	0.298	0.475			
	-8	1/2	0.391	0.605			
	-10	5/8	0.485	0.720			
	-12	3/4	0.602	0.884			

Spencer Aircraft provides the information in this catalog for its customers as a ***reference only*** and it is not intended for design or guarantee of accuracy. Though it is our policy to ship all orders in a timely manner, Spencer Aircraft cannot guarantee that all items will be in stock at all times.

STRATOFLEX (PH) / AEROQUIP (AE)

FITTINGS	DASH #	TUBE SIZE OD	HOSE SIZE ID	HOSE SIZE OD	MAX OPER. PSI	HOSE TYPE	TEMP RANGE
AE 471 **MS27404** STRAIGHT	-2D	1/8	0.125	0.344	300	**306** **193** LOW PRESSURE **MIL-H-5593**	- 65° F TO + 160° F
	-3D	3/16	0.188	0.406	250		
	-4D	1/4	0.250	0.469	200		
	-6D	3/8	0.375	0.594	150		
	-8D	1/2	0.500	0.750			
	-10D	5/8	0.625	0.875			
AE 816 **PS 676** **PH 170** USE WITH HOSE: AE701 & 601, 176 & 156	-3	3/16	0.156	0.375	1000	**AE701** **176** MEDIUM PRESSURE	CONTINUOUS: - 65° F TO + 300° F AMBIENT: - 65° F TO + 250° F
	-4	1/4	0.219	0.438			
	-5	5/16	0.281	0.484			
	-6	3/8	0.344	0.547			
	-8	1/2	0.438	0.641			
	-10	5/8	0.562	0.797			
	-12	3/4	0.688	0.938			
	-16	1	0.875	1.156	750		
	-20	1-1/4	1.125	1.437	500		
	-24	1-1/2	1.375	1.704	250		
	-32	2	1.781	2.094	200		

FITTINGS	PART #	HOSE SIZE OD	COMPONENTS SOCKET	NIPPLE	NUT
AE 471 **MS27404** USE WITH HOSE: 306 193	-2D	0.125	213-2D	231-2D	290-2D
	-3D	0.188	213-3D	231-3	290-3D
	-4D	0.250	213-4D	231-4	290-4D
	-6D	0.375	213-6D	231-6	290-6D
	-8D	0.500	213-8D	231-8D	290-8D
	-10D	0.625	213-10D	231-10D	290-10D

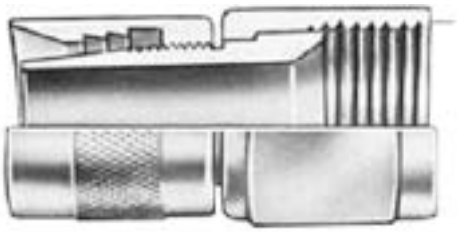

AE 816 **PH 676** **PH 170** USE WITH HOSE: AE701 & 601, 176 & 156	-3	0.375	516-3D	526-3
	-4	0.438	516-4D	526-4
	-5	0.484	516-5D	562-5
	-6	0.547	516-6D	562-6D
	-8	0.641	516-8D	526-8
	-10	0.797	516-10D	526-10
	-12	0.938	516-12D	526-12
	-16	1.156	516-16D	526-16D
	-20	1.437	516-20D	526-20D
	-24	1.704	516-24D	526-24D
	-32	2.094	516-32D	526-32D



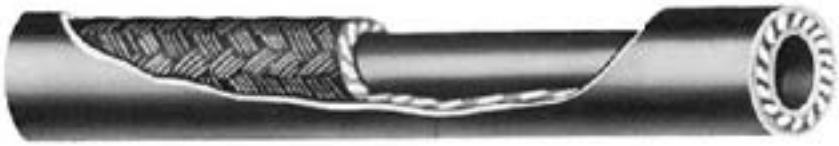

HOSE	DASH #	TUBE SIZE OD	HOSE SIZE ID	HOSE SIZE OD	WORKING PRESSURE	PROOF PRESSURE	
AE 306 **PH 193**	-2	0.125	0.125	0.35	300	600	**MIL-H-5593** -65°F TO +165°F
	-3	0.188	0.188	0.41	250	500	
	-4	0.250	0.250	0.48	200	400	
	-6	0.375	0.375	0.60	150	300	
	-8	0.500	0.500	0.75		250	
	-10	0.625	0.625	0.87			

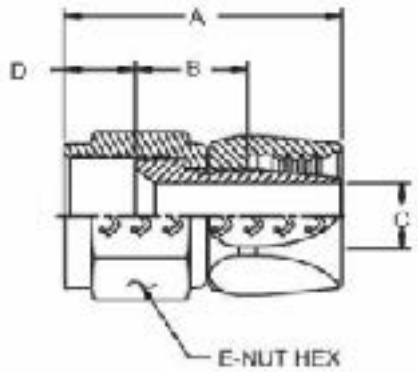

FITTINGS			THREAD
PH 311	-2	0.125	3/8-24
	-3	0.188	7/16-20
STRAIGHT	-4	0.250	1/2-20
	-6	0.375	9/16-08
37° FLARE	-8	0.500	3/4-16
SWIVEL	-10	0.625	7/8-14

253-848-9349
SpencerAircraft.com

Spencer Aircraft provides the information in this catalog for its customers as a ***reference only*** and it is not intended for design or guarantee of accuracy. Though it is our policy to ship all orders in a timely manner, Spencer Aircraft cannot guarantee that all items will be in stock at all times.

STRATOFLEX (PH) / AEROQUIP (AE)

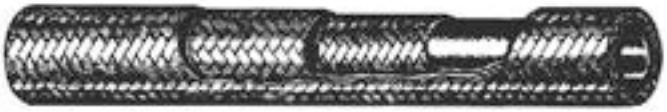

HOSE	DASH #	TUBE SIZE OD	HOSE SIZE ID	HOSE SIZE OD	WORKING PRESSURE	PROOF PRESSURE	
AE 303 **PH 111** HYDRAULIC PNEUMATIC COOLANT FUEL & OIL	-3	0.188	0.125	0.45	3000	6000	**MIL-H-8794** -3 THRU -12: -65°F TO +250°F -16 THRU -48: -40°F TO +250°F
	-4	0.250	0.188	0.52			
	-5	0.312	0.250	0.58		5000	
	-6	0.375	0.312	0.67	2000	4500	
	-8	0.500	0.406	0.77		4000	
	-10	0.625	0.500	0.92	1750	3500	
	-12	0.750	0.625	1.08	1500	3000	
	-16	1.000	0.875	1.23	800	1600	
	-20	1.250	1.125	1.50	600	1250	
	-24	1.500	1.375	1.75	500	1000	
	-32	2.000	1.812	2.22	350	700	
	-40	2.500	2.375	2.88	200	300	
	-48	3.125	3.000	3.56			

FITTINGS	DASH #	TUBE SIZE OD	THREAD
AE 491 (-3 thru -12) **AE 451 (-16 thru -48)** **PH 300** **MS24587** STRAIGHT 37° FLARE SWIVEL	-3	0.188	3/8-24
	-4	0.250	7/16-20
	-5	0.312	1/2-20
	-6	0.375	9/16-18
	-8	0.500	3/4-16
	-10	0.625	7/8-14
	-12	0.750	1-1/16-12
	-16	1.000	1-5/16-12
	-20	1.250	1-5/8-12
	-24	1.500	1-7/8-12
	-32	2.000	2-1/2-12
PH 312 STRAIGHT 37° FLARE SWIVEL	-40	2.500	3-12
	-48	3.125	3-1/2-12

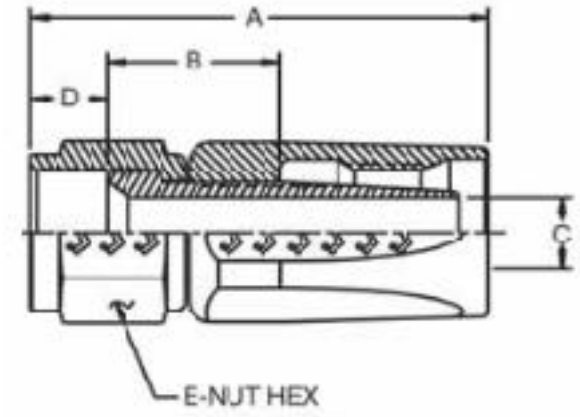

AE 98006 **PH 646** **MS27226 (-4 thru -10)** 45° ELBOW 37° FLARE SWIVEL	-4	0.250	7/16-20
	-5	0.312	1/2-20
	-6	0.375	9/16-18
	-8	0.500	3/4-16
	-10	0.625	7/8-14
AE 98006 **PH 640** **MS27226 (-12 thru -32)** 45° ELBOW 37° FLARE SWIVEL	-12	0.750	1-1/16-12
	-16	1.000	1-5/16-12
	-20	1.250	1-5/8-12
	-24	1.500	1-7/8-12

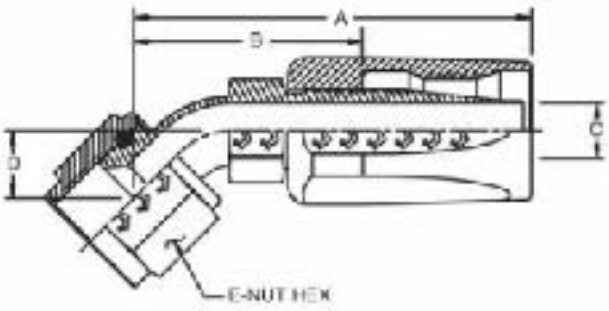

AE98005 **PH 649** **MS27224 (-4 thru -10)** 90° ELBOW 37° FLARE SWIVEL	-4	0.250	7/16-20
	-5	0.312	1/2-20
	-6	0.375	9/16-18
	-8	0.500	3/4-16
	-10	0.625	7/8-14
AE 980137 **PH 643** **MS27224 (-12 thru -32)** 90° ELBOW 37° FLARE SWIVEL	-12	0.750	1-1/16-12
	-16	1.000	1-5/16-12
	-20	1.250	1-5/8-12
	-24	1.500	1-7/8-12

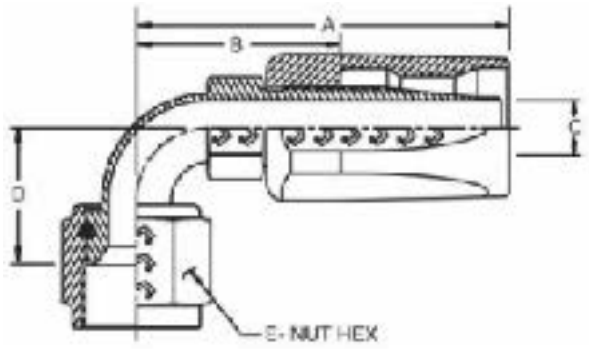

Spencer Aircraft provides the information in this catalog for its customers as a ***reference only*** and it is not intended for design or guarantee of accuracy. Though it is our policy to ship all orders in a timely manner, Spencer Aircraft cannot guarantee that all items will be in stock at all times.

STRATOFLEX (PH) / AEROQUIP (AE)



HOSE	DASH #	TUBE SIZE OD	HOSE SIZE ID	HOSE SIZE OD	WORKING PRESSURE		PROOF PRESSURE	
					FUEL & OIL	HYDRAULIC		
AE 601 PH 156 MEDIUM PRESSURE LIGHT-WEIGHT ENGINE	-3	0.188	0.156	0.375	1500		3000	**MIL-H-83797** -65°F TO +300°F
	-4	0.250	0.219	0.438				
	-5	0.312	0.281	0.484				
	-6	0.375	0.344	0.547				
	-8	0.500	0.438	0.650	1250		2500	
	-10	0.625	0.563	0.797				
	-12	0.750	0.688	0.938	1250	950	2000	
	-16	1.000	0.875	1.156	1000	625	1500	
	-20	1.250	1.125	1.437	800	--	1300	
	-24	1.500	1.375	1.704	400	--	800	
	-32	2.000	1.750	2.102	350	--	700	

FITTINGS	DASH #	TUBE SIZE OD	THREAD
AE 816 PH 676 M83798/1 STRAIGHT 37° FLARE SWIVEL	-3	0.188	3/8-24
	-4	0.250	7/16-20
	-5	0.312	1/2-20
	-6	0.375	9/16-18
	-8	0.500	3/4-16
	-10	0.625	7/8-14
	-12	0.750	1-1/16-12
	-16	1.000	1-5/16-12
	-20	1.250	1-5/8-12
	-24	1.500	1-7/8-12
	-32	2.000	2-1/2-12
AE 8846 PH 678 M83791/2 45° ELBOW 37° FLARE SWIVEL 516 Socket / 8746 Nipple	-4	0.250	7/16-20
	-5	0.312	1/2-20
	-6	0.375	9/16-18
	-8	0.500	3/4-16
	-10	0.625	7/8-14
	-12	0.750	1-1/16-12
	-16	1.000	1-5/16-12
	-20	1.250	1-5/8-12
	-24	1.500	1-7/8-12
	-32	2.000	2-1/2-12
AE 8891 PH 680 M83791/3 90° ELBOW 37° FLARE SWIVEL	-3S	0.188	3/8-24
	-4S	0.250	7/16-20
	-5S	0.312	1/2-20
	-6D	0.375	9/16-18
	-8D	0.500	3/4-16
	-10D	0.625	7/8-14
	-12D	0.750	1-1/16-12
	-16D	1.000	1-5/16-12
	-20D	1.250	1-5/8-12
	-24D	1.500	1-7/8-12
AE 980005 PH 649 MS27224 90° ELBOW 37° FLARE SWIVEL	-4	0.250	7/16-20
	-5	0.312	1/2-20
	-6	0.375	9/16-18
	-8	0.500	3/4-16
	-10	0.625	7/8-14
	-12	0.750	1-1/16-12
	-16	1.000	1-5/16-12
	-20	1.250	1-5/8-12
	-24	1.500	1-7/8-12
	-32	2.000	2-1/2-12

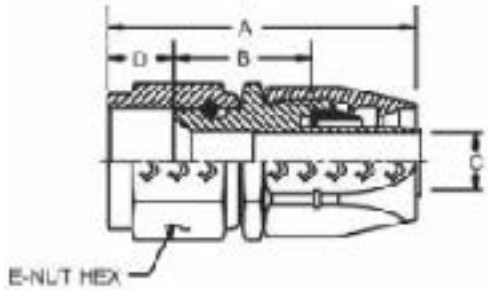

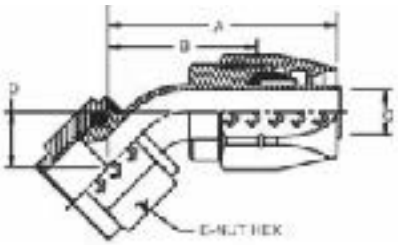

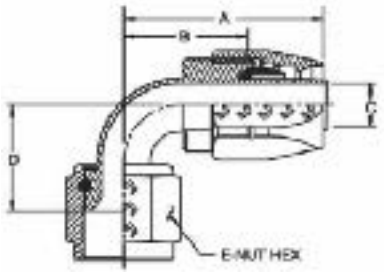

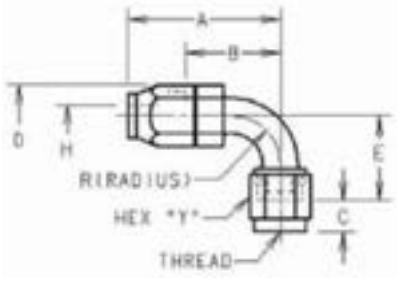

253-848-9349
SpencerAircraft.com

Spencer Aircraft provides the information in this catalog for its customers as a ***reference only*** and it is not intended for design or guarantee of accuracy. Though it is our policy to ship all orders in a timely manner, Spencer Aircraft cannot guarantee that all items will be in stock at all times.

STRATOFLEX (PH) / AEROQUIP (AE)

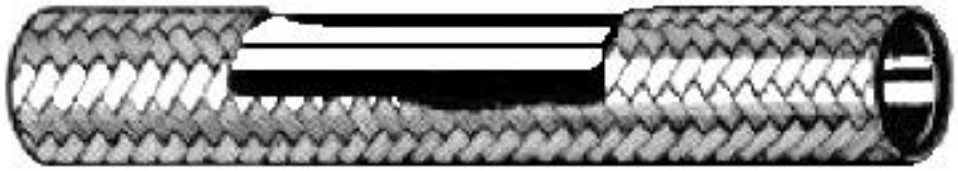

HOSE	DASH #	TUBE SIZE OD	HOSE SIZE ID	HOSE SIZE OD	WORKING PRESSURE	BURST PRESSURE		
						MIN @ 70° F	MIN @ 450° F	
AE 666 **AE 667** **PH 124** AIRCRAFT & MISSILE FUEL, LUBE OIL, COOLANT HYDRAULIC BALLISTIC PNEUMATIC	-3*	0.188	0.125	0.273	1500	12000	7500	**MIL-H-27267** -65°F TO +450°F
	-4	0.250	0.188	0.343				
	-5	0.312	0.250	0.406		10000	6500	
	-6	0.375	0.312	0.469		9000		
	-8	0.500	0.406	0.585		8000	6000	
	-10	0.625	0.500	0.687		7000	5500	
	-12	0.750	0.625	0.812	1000	5000	3500	
	-16Z	1.000	0.875	1.140	1250			
	-20Z	1.250	1.125	1.390	1000	4000	3000	
	-24Z	1.500	1.375	1.707				

FITTINGS	DASH #	HOSE SIZE	THREAD
PH 524 STRAIGHT 37° FLARE SWIVEL	-3CR	-3	3/8-24
	-4CR	-4	7/16-20
	-5CR	-5	1/2-20
	-6CR	-6	9/16-18
	-8*	-8	3/4-16
	-10*	-10	7/8-14
	-12*	-12	1-1/16-12
	-16*	-16Z	1-5/16-12
	-20*	-20Z	1-5/8-12
	-24*	-24Z	1-7/8-12

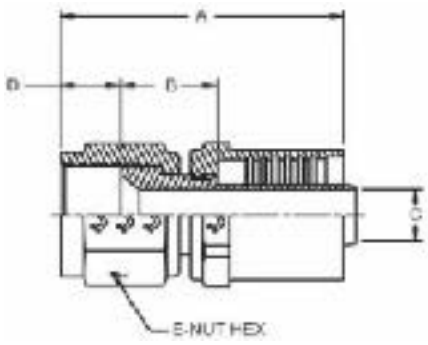

PH 526 45° ELBOW 37° FLARE SWIVEL	-3CR	-3	3/8-24
	-4CR	-4	7/16-20
	-5CR	-5	1/2-20
	-6CR	-6	9/16-18
	-8*	-8	3/4-16
	-10*	-10	7/8-14
	-12*	-12	1-1/16-12
	-16*	-16Z	1-5/16-12
	-20*	-20Z	1-5/8-12
	-24*	-24Z	1-7/8-12

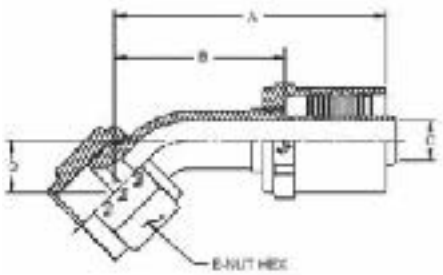

PH 528 **MS33656** 90° ELBOW 37° FLARE SWIVEL	-3CR	-3	3/8-24
	-4CR	-4	7/16-20
	-5CR	-5	1/2-20
	-6CR	-6	9/16-18
	-8*	-8	3/4-16
	-10*	-10	7/8-14
	-12*	-12	1-1/16-12
	-16*	-16Z	1-5/16-12
	-20*	-20Z	1-5/8-12
	-24*	-24Z	1-7/8-12

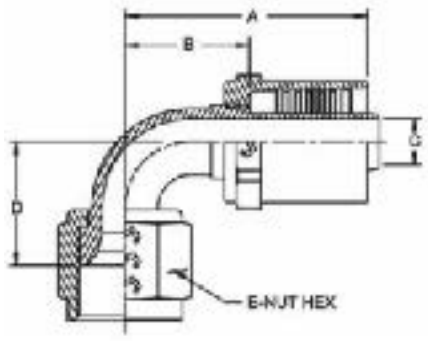

*Add material designation CR for corrosion resistant steel or D for aluminum nipple and nut with a stainless steel socket.

Spencer Aircraft provides the information in this catalog for its customers as a ***reference only*** and it is not intended for design or guarantee of accuracy. Though it is our policy to ship all orders in a timely manner, Spencer Aircraft cannot guarantee that all items will be in stock at all times.

STRATOFLEX HOSE ASSEMBLY INSTRUCTIONS

For 193 Hose, MS27404 Fittings and Standard Hose Fittings

1. Measure hose to desired length and then cut with sharp knife or saw.

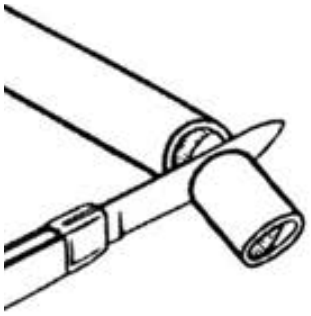

2. Screw hose into socket counter-clockwise until it bottoms. Back hose out 1/4 turn.

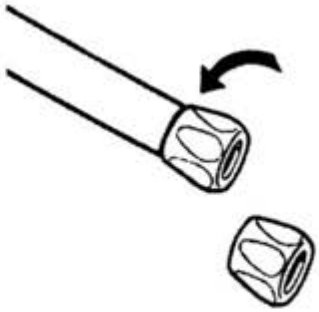

3. Insert nipple into nut and tighten on mating flared adapter.

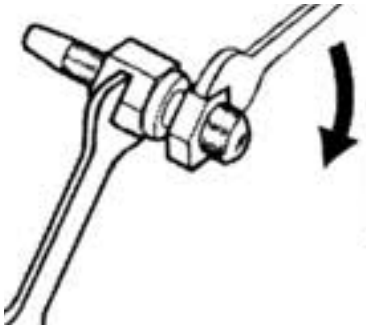

4. Oil inside of hose and outside of nipple liberally and insert nipple in socket.



5. Screw nipple into socket and hose by using wrench on hex adapter. Leave a .005 inch to .031 inch clearance between nut and socket so that nut will swivel freely. Loosen adapter from nut and remove.

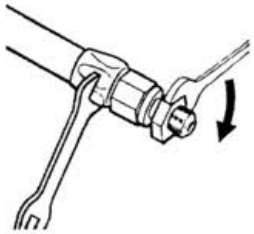

6. Clean, inspect and proof test.

Spencer Aircraft provides the information in this catalog for its customers as a ***reference only*** and it is not intended for design or guarantee of accuracy. Though it is our policy to ship all orders in a timely manner, Spencer Aircraft cannot guarantee that all items will be in stock at all times.

STRATOFLEX HOSE ASSEMBLY INSTRUCTIONS

For 111 Hose, MS24587 Fittings and Standard Hose Fittings

1. Place hose in vice and cut to desired length using fine tooth hacksaw or cut-off wheel. Cut-off saw may be used if available

2. Place socket in vise. Screw hose into socket (counter-clockwise) until hose bottoms on socket shoulder. Back hose out 1/4 turn.

3. Tighten the nut and nipple (with wrench) on assembly tool. Oil inside of the hose and nipple threads liberally. Insert assembly tool in hose, working in and out until tool moves freely.

4. Screw nipple into socket using wrench on hex assembly tool and leave a .005 inch to .031 inch clearance between nut and socket so that nut will swivel freely. Loosen tool from nut and remove.

   a. For elbow swivel nut assembly, follow steps 1 and 2. Oil inside of the hose and nipple threads liberally. Screw nipple into socket until a gad of .005 inch to .031 inch between nipple hex and socket is reached

   b. For elbow flange assembly, follow steps 1 and 2. Place flange on nipple shoulder. Check for proper fit of nipple in counter bore of flange. Oil threads of the nipple and inside socket liberally. Screw nipple assembly into socket, leaving a .005 inch to .031 inch gap between nipple hex and socket.

5. Clean, inspect and proof test.

HOSE FITTINGS

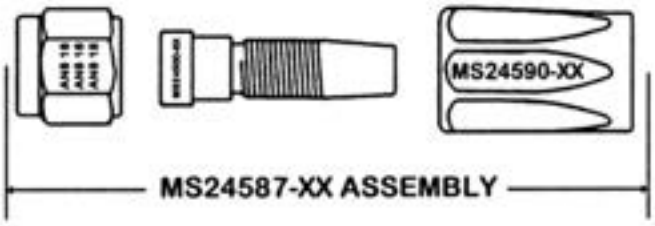

Stratoflex 300- Aeroquip 491

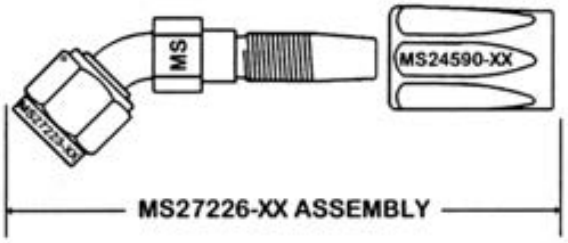

Stratoflex 646- and 640-
Aeroquip 98006

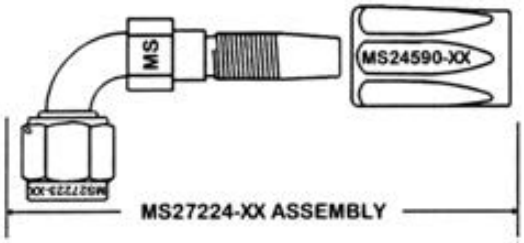

Stratoflex 649- and 643-
Aeroquip 98005

Fits Thread Size	Assembly Number Straight	Assembly Number 90 Degree	Assembly Number 45 Degree
3/8-24	MS24587-3		
7/16-20	MS24587-4	MS27224-4	MS27226-4
1/2-20	MS24587-5	MS24587-5	MS27226-5
9/16-18	MS24587-6	MS24587-6	MS27226-6
3/4-16	MS24587-8	MS24587-8	MS27226-8
7/8-14	MS24587-10	MS24587-10	MS27226-10
1-1/16-12	MS24587-12	MS24587-12	MS27226-12

Spencer Aircraft provides the information in this catalog for its customers as a ***reference only*** and it is not intended for design or guarantee of accuracy. Though it is our policy to ship all orders in a timely manner, Spencer Aircraft cannot guarantee that all items will be in stock at all times.

HYDRAULIC HOSE

Selection & Comparison Chart



MIL H 83797 / AE701 / 156



MIL H 27267 / 666 / 124



MIL H 8794 / 303 / 111



MIL H 5593 / 306 / 193

LPI = Low Pressure Instrument

MPH = Medium Pressure Hydraulic

These hoses are compatible with commonly used fuel, oil and coolants found in general aviation

MIL H (part #)	Type	Aeroquip Part #	Deutsch Part #	Stratoflex Part #	Liner	Reinforcement	Cover	Working PSI	Compatible Fittings
MIL H 5593-2	LPI	306-2	3H5593-2	193-2	BUNA	NON METALLIC FIBER	SYNTHETIC RUBBER	300	MS27404 Straight
MIL H 5593-3	LPI	306-3	3H5593-3	193-3				250	
MIL H 5593-4	LPI	306-4	3H5593-4	193-4				200	
MIL H 5593-6	LPI	306-6	3H5593-6	193-6				150	
MIL H 5593-8	LPI	306-8	3H5593-8	193-8					
MIL H 5593-10	LPI	306-10	3H5593-10	193-10					
MIL H 8794-3	MPH	303-3	3H8794-3	111-3	SYNTHETIC RUBBER	STEEL WIRE	NON METALLIC FIBER	3,000	MS24587 Straight MS27224 90 Degree MS27226 45 Degree
MIL H 8794-4	MPH	303-4	3H8794-4	111-4					
MIL H 8794-5	MPH	303-5	3H8794-5	111-5					
MIL H 8794-6	MPH	303-6	3H8794-6	111-6				2,000	
MIL H 8794-8	MPH	303-8	3H8794-8	111-8					
MIL H 8794-10	MPH	303-10	3H8794-10	111-10				1,750	
MIL H 8794-12	MPH	303-12	3H8794-12	111-12				1,500	
MIL H 8794-16	MPH	303-16	3H8794-16	111-16				800	
MIL H 83797-4	MPH	AE701-4	3H238-4	156-4	IMPROVED ELASTOMER	STAINLESS STEEL WIRE		1,500	M83798/1 Straight M83798/2 45 Degree M83798/3 90 Degree
MIL H 83797-6	MPH	AE701-6	3H238-6	156-6					
MIL H 83797-8	MPH	AE701-8	3H238-8	156-8				1,250	
MIL H 83797-10	MPH	AE701-10	3H238-10	156-10					
MIL H 83797-12	MPH	AE701-12	3H238-12	156-12					
MIL H 27267-4	MPH	666-4	3H379-4	124-4	TEFLON TFE	STAINLESS STEEL WIRE		1,500	MS27053 Straight MS27059 45 Degree MS27060 90 Degree
MIL H 27267 -6	MPH	666-6	3H379-6	124-6					
MIL H 27267-8	MPH	666-8	3H379-8	124-8					
MIL H 27267-10	MPH	666-10	3H379-10	124-10					
MIL H 27267-12	MPH	666-12	3H379-12	124-12				1,000	



Spencer Aircraft provides the information in this catalog for its customers as a ***reference only*** and it is not intended for design or guarantee of accuracy. Though it is our policy to ship all orders in a timely manner, Spencer Aircraft cannot guarantee that all items will be in stock at all times.

HOSE FITTINGS

For MIL-H-83797 Specification Hose

STRAIGHT FLARED FITING

Part Number	Tube Size O.D.	Hose Size	Thread
M83798/1-3	.188	-3	3/8-24
M83798/1-4	.250	-4	7/16-20
M83798/1-5	.312	-5	1/2-20
M83798/1-6	.375	-6	9/16-18
M83798/1-8	.500	-8	3/4-16
M83798/1-10	.625	-10	7/8-14
M83798/1-12	.750	-12	1-1/16-12

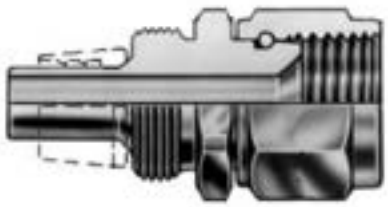

37˚ Flare Swivel M83791/1
Mates with MS33656 type connectors.
Stratoflex # 676 - Aeroquip # 816

45˚ ELBOW FLARED FITTING

Part Number	Tube Size O.D.	Hose Size	Thread
M83798/2-3	.188	-3	3/8-24
M83798/2-4	.250	-4	7/16-20
M83798/2-5	.312	-5	1/2-20
M83798/2-6	.375	-6	9/16-18
M83798/2-8	.500	-8	3/4-16
M83798/2-10	.625	-10	7/8-14
M83798/2-12	.750	-12	1-1/16-12



37˚ Flare Swivel M83791/2
Mates with MS33656 type connectors.
Stratoflex # 678 - Aeroquip # 8846

90˚ ELBOW FLARED FITTING

Part Number	Tube Size O.D.	Hose Size	Thread
M83798/3-3	.188	-3	3/8-24
M83798/3-4	.250	-4	7/16-20
M83798/3-5	.312	-5	1/2-20
M83798/3-6	.375	-6	9/16-18
M83798/3-8	.500	-8	3/4-16
M83798/3-10	.625	-10	7/8-14
M83798/3-12	.750	-12	1-1/16-12



37˚ Flare Swivel M83791/3
Mates with MS33656 type connectors.
Stratoflex # 680 - Aeroquip # 8891



Prist Fuel Additives

For when your fuel needs a little bit more.

FIRE SLEEVED HOSE & CLAMP



RED SILICONE FIBERGLASS -65 TO 500˚ F. (-54 TO 262˚ C.)
AS-1072
NOTE: Temperature rating is for Fire Sleeve Only

Fire Sleeve P/N		Clamp	Sleeve I.D.	MIL-H8794		MIL-H27267		MIL-H83797/1			MIL-5593	
2650	AE102			111	303	124	666	156	601	AE701	193	306
-4	-4	900591B-1C	1/4			-3	-3					
-5	-5	900591B-1C	5/16			-3	-3					
-6	-6	900591B-1C	3/8			-3 or -4	-3 or -4					
-7	-7	900591B-1C	7/16			-5 or -6	-5 or -6	-3	-3	-3	-2	-2
-8	-8	900591B-1C	1/2	-3	-3	-6	-6	-4	-4	-4	-3	-3
-9	-9	900591B-2C	9/16	-4	-4			-4	-5	-4	-4	-4
-10	-10	900591B-2C	5/8	-3 or -4	-5	-8	-8	-5		-5		
-11	-11	900591B-2C	11/16	-5		-10					-6	-6
-12	-12	900591B-2C	3/4	-5 or -6	-6		-10	-8	-6	-8		
-13	-13	900591B-2C	13/16	-8							-8	-8
-14	-14	900591B-2C	7/8		-8	-12	-12		-8			
-15	-15	900591B-3C	15/16									
-16	-16	900591B-3C	1	-10	-10			-10	-10	-10	-10	-10
-18	-18	900591B-3C	1-1/8		-12			-12	--	-12	-12	-12
-20	-20	900591B-3C	1-1/4	-12		-16	-16		-12			
-22	-22	900591B-4C	1-3/8	-16	-16			-16	-16	-16	-16	-16
-24	-24	900591B-4C	1-1/2				-20					
-26	-26	900591B-4C	1-5/8			-20		-20		-20	-20	-20
-28	-28	900591B-4C	1-3/4	-20								
-30	-30	900591B-4C	1-7/8	-24		-24	-24	-24		-24	-24	-24
-32	-32	900591B-5C	2									
-36	-36	900591B-5C	2-1/4									
-38	-38	900591B-5C	2-3/8	-32				-32		-32	-32	-32
-40	-40		2-1/2									
-42	-42		2-5/8									
-44	-44		2-3/4									
-46	-46		2-7/8									
-48	-48		3	-40								
-52	-52		3-1/4									
-54	-54		3-3/8									
-56	-56		3-1/2									
-60	-60		3-3/4	-48								
-64	-64		4									
-72	-72		4-1/2									
-80	-80		5									

10781 - Fire Sleeve Clamp

Fire Sleeve Clamp Size Versus Hose Assembly Size

	10781		
Hose	**-4-22CR**	**-4-32CR**	**-4-48CR**
111	-3/-8	-10/-16	-20/-32
112	-4/-8	-10/-12	-16
124	-6/-12	-16Z/-20Z	-24Z
156	-4/-10	-12/-16	-20/-32
170			
171		-12	
193			
3162		-12/-16	
Hand Installation tool, Part Number T11-151, available.			



Required Clamps for Sleeve Sizes (up to):			
1”	JS242	900591B-1C	
1-1/2”	JS252	900591B-2C	10781-4-22CR
2”	JS253	900591B-3C	10781-4-32CR
J020		Fire Sleeve Clamp Tool	

253-848-9349
SpencerAircraft.com

Spencer Aircraft provides the information in this catalog for its customers as a ***reference only*** and it is not intended for design or guarantee of accuracy. Though it is our policy to ship all orders in a timely manner, Spencer Aircraft cannot guarantee that all items will be in stock at all times.

FUEL HOSE

MIL-H-6000 & OIL HOSE

Part Number	Stratoflex Part Number	Hose Dimensions I.D. (inches)	I.D. (inches)	Burst Pressure (PSI)	Wt./Ft. (pounds)
6000-1/4	160-4	1/4	5/8	1,000	2.98
6000-5/16	160-5	5/16	11/16		3.64
6000-3/8	160-6	3/8	3/4		3.23
6000-1/2	160-8	1/2	7/8		3.70
6000-5/8	160-10	5/8	1		4.05
6000-3/4	160-12	3/4	1-1/8		4.66
6000-7/8	160-14	7/8	1-1/4		5.67
6000-1	160-16	1	1-3/8		5.74

MIL-H-6000 FUEL and OIL HOSE



DUCTING

AERODUCT FLEXIBLE DUCTING

SCAT

Aeroduct Dash Number	Inside Diameter (inches)
-2	1/2
-3	3/4
-4	1
-5	1-1/4
-6	1-1/2
-7	1-3/4
-8	2
-9	2-1/4
-10	2-1/2
-11	2-3/4
-12	3
-13	3-1/4
-14	3-1/2
-15	3-3/4
-16	4

AERODUCT FLEXIBLE DUCTING

SCEET

Aeroduct Dash Number	Inside Diameter (inches)
-2A	5/8
-3	3/4
-4	1
-5	1-1/4
-6	1-1/2
-7	1-3/4
-8	2
-9	2-1/4
-10	2-1/2
-11	2-3/4
-12	3
-13	3-1/4
-14	3-1/2
-15	3-3/4
-16	4

SCREWING DUCTING TOGETHER

Short lengths of ducting can be spliced to eliminate waste. For permanent splices, and adhesive should be applied to the ends before joining. To relieve wire tension when cut, bend end of wire in slightly

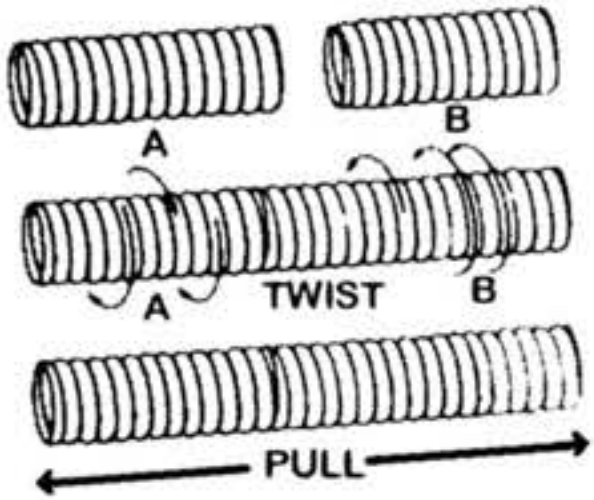

Spencer Aircraft provides the information in this catalog for its customers as a ***reference only*** and it is not intended for design or guarantee of accuracy. Though it is our policy to ship all orders in a timely manner, Spencer Aircraft cannot guarantee that all items will be in stock at all times.

ADEL CLAMPS

Cushioned Loop Support

MS21919WXXZZ



212° - 450° Max Temp

MS21919WXXZZ
(ZZ) are digits describing the internal diameter of the closed clamp in 1/16 of an inch.
XX characters have the following significance:

DE = Aluminum band, Ethylene Propylene Cushion (212F)
DF = Aluminum band, Nitrile Cushion (212F)
DG = Aluminum band, Chloroprene Cushion (212F)
CE = Corrosion Resistant Steel band, Ethylene Propylene Cushion (275F)
CF = Corrosion Resistant Steel band, Nitrile Propylene Cushion (200F)
CH = Corrosion Resistant Steel band, Silicone Cushion (400F)
CG = Corrosion Resistant Steel band, Chloroprene Cushion (212F)
CJ = Corrosion Resistant Steel band, Fluorosilicone Cushion (450F)
F = Low Carbon Steel Band, Nitrile Cushion (212F)
G = Low Carbon Steel Band, Chloroprene Cushion (212F)
H = Low Carbon Steel Band, Silicon Cushion (400F)

Cushion Application and Color Information:

Ethylene Propylene - Used in areas contaminated with phosphate-ester hydraulic fluid and other synthetic fluids. Excellent ozone resistance. Not resistant to petroleum based fluids. Purple.

Nitrile - Used primarily in fuel immersion and fuel vapors. Good ozone resistance. Not resistant to phosphate-ester based fluids. Not for use on titanium tubing. Yellow.

Chloroprene - General purpose use in areas contaminated with petroleum based hydraulic fluids and occasional fuel splash. Excellent ozone resistant. Not resistant to phosphate-ester based fluids. Not for use on titanium tubing. Black with a blue identifier patch.

Silicone - Elevated temperature usage in phosphate-ester based fluid and other synthetic fluid contaminated areas. Unaffected by ozone. Not resistant to petroleum based fluids. Natural white.

Fluorosilicone - Elevated temperature usage in petroleum based fluid contaminated areas. Unaffected by ozone. Not resistant to phosphate-ester based fluids. Blue.

Silicone - RED now obsolete and used only on the low carbon Steel.

To Fit Tube O.D.	MS21919W
1/8	2
3/16	3
1/4	4
5/16	5
3/8	6
7/16	7
1/2	8
9/16	9
5/8	10
11/16	11
3/4	12
13/16	13
7/8	14
15/16	15
1	16
1-1/16	17
1-1/8	18
1-3/16	19

To Fit Tube O.D.	MS21919W
1-1/4	20
1-5/16	21
1-3/8	22
1-7/16	23
1-1/2	24
1-9/16	25
1-5/8	26
1-11/16	27
1-3/4	28
1-13/16	29
1-7/8	30
1-15/16	31
2	32
2-1/16	33
2-1/8	34
2-3/16	35
2-1/4	36

To Fit Tube O.D.	MS21919W
2-1/4	36
2-5/16	37
2-3/8	38
2-1/2	40
2-5/8	42
2-11/16	43
2-3/4	44
2-13/16	45
2-7/8	46
2-15/16	47
3	48
3-1/8	50
3-1/4	52
3-3/8	54
3-1/2	56
3-5/8	58
4	64
4-1/8	66

253-848-9349
SpencerAircraft.com

Spencer Aircraft provides the information in this catalog for its customers as a ***reference only*** and it is not intended for design or guarantee of accuracy. Though it is our policy to ship all orders in a timely manner, Spencer Aircraft cannot guarantee that all items will be in stock at all times.

HOSE CLAMPS

Breeze



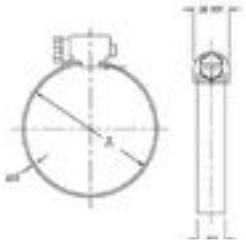

Part #	Band Material	Screw Material	SAE	Band Width	Min. Inches	Max. Inches	Min. mm	Max. mm	Torque Range	Hex Screw
6604 Sub: 6704	301 SS	410 SS	4	5/16	7/16	11/16	11	17	15 in/lbs	1/4
6606 Sub: 6706			6		1/2	13/16	13	20		
6608 Sub: 6706			8		5/8	1	15	24		
6610 Sub: 6710			10		3/4	1-1/8	19	28		

SAE	100 AERO-SEAL		200 AERO-SEAL		300 AERO-SEAL		Inches (A)		mm	
	Brand PN	Global PN	Brand PN	Global PN	Brand PN	Global PN	min	max	min	max
6	100 06 H	0360 0000 016	200 06 H	0360 0020 016	300 06 H	0360 0030 016	7/16	25/32	11	20
8	100 08 H	0360 0000 018	200 08 H	0360 0020 018	300 08 H	0360 0030 018	1/2	29/32	13	23
10	100 10 H	0360 0000 021	200 10 H	0360 0020 021	300 10 H	0360 0030 021	9/16	1-1/16	14	27
12	100 12 H	0360 0000 025	200 12 H	0360 0020 025	300 12 H	0360 0030 025	11/16	1-1/4	17	32
16	100 16 H	0360 0000 030	200 16 H	0360 0020 030	300 16 H	0360 0030 030	13/16	1-1/2	21	38
20	100 20 H	0360 0000 033	200 20 H	0360 0020 033	300 20 H	0360 0030 033		1-3/4		44
24	100 24 H	0360 0000 039	200 24 H	0360 0020 039	300 24 H	0360 0030 039	1-1/16	2	27	51
28	100 28 H	0360 0000 045	200 28 H	0360 0020 045	300 28 H	0360 0030 046	1-5/16	2-1/4	33	57
32	100 32 H	0360 0000 052	200 32 H	0360 0020 052	300 32 H	0360 0030 052	1-9/16	2-1/2	40	64
36	100 36 H	0360 0000 058	200 36 H	0360 0020 058	300 36 H	0360 0030 058	1-13/16	2-3/4	46	70
40	100 40 H	0360 0000 064	200 40 H	0360 0020 064	300 40 H	0360 0030 064	2-1/16	3	52	76
44	100 44 H	0360 0000 071	200 44 H	0360 0020 071	300 44 H	0360 0030 071	2-5/16	3-1/4	59	83
48	100 48 H	0360 0000 077	200 48 H	0360 0020 077	300 48 H	0360 0030 077	2-9/16	3-1/2	65	89
52	100 52 H	0360 0000 083	200 52 H	0360 0020 083	300 52 H	0360 0030 083	2-13/16	3-3/4	71	95
56	100 56 H	0360 0000 090	200 56 H	0360 0020 090	300 56 H	0360 0030 090	3-1/16	4	78	102
60	100 60 H	0360 0000 096	200 60 H	0360 0020 096	300 60 H	0360 0030 096	3-5/16	4-1/4	84	108
64	100 64 H	0360 0010 103	200 64 H	0360 0020 103	300 64 H	0360 0030 103	3-9/16	4-1/2	91	114
72	100 72 H	0360 0000 088	200 72 H	0360 0020 088	300 72 H	0360 0030 088	1-7/8	5	48	127
80	100 80 H	0360 0000 102	200 80 H	0360 0020 102	300 80 H	0360 0030 102	2-1/2	5-1/2	64	140
88	100 88 H	0360 0000 116	200 88 H	0360 0020 116	300 88 H	0360 0030 116	3-1/8	6	79	152
96	100 96 H	0360 0000 129	200 96 H	0360 0020 129	300 96 H	0360 0030 129	3-5/8	6-1/2	92	165
104	100 104 H	0360 0000 142	200 104 H	0360 0020 142	300 104 H	0360 0030 142	4-1/8	7	105	178
128	100 128 H	0360 0000 180	200 128 H	0360 0020 180	300 128 H	0360 0030 180	5-5/8	8-1/2	143	216
152	100 152 H	0360 0000 218	200 152 H	0360 0020 218	300 152 H	0360 0030 218	7-1/8	10	181	254
188	100 188 H	0360 0000 275	200 188 H	0360 0020 275	300 188 H	0360 0030 275	9-3/8	12-1/4	238	311



SHELL

AeroShell greases are specifically formulated to excel in wide-ranging applications: protecting exposed wheel bearings; lubricating highly loaded gears; in plain, ball and roller bearings; and on sliding surfaces and actuator screws. Our multipurpose greases can help to reduce costs and improve maintenance efficiency.

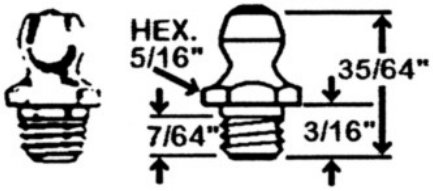

1/4"-28 TAPER THD. (SAE-LT)
MS15001-1

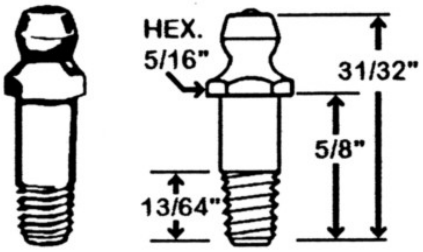

1/4"-28 TAPER THD. (SAE-LT)
MS15001-2

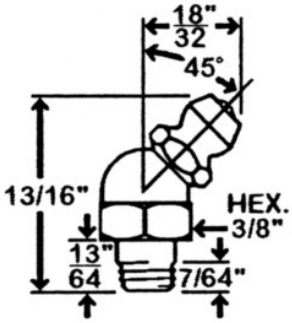

1/4"-28 TAPER THD. (SAE-LT)
MS15001-3

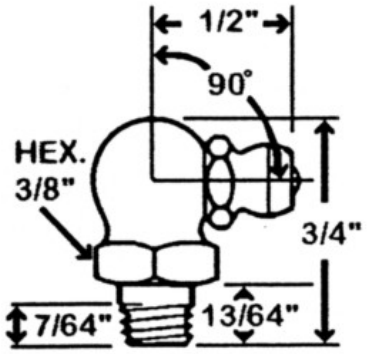

1/4"-28 TAPER THD. (SAE-LT)
MS15001-4

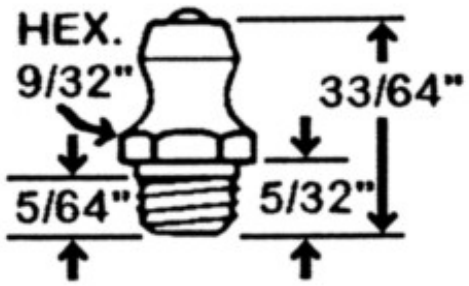

1/4"-28 UNF-2A
1/4"-28 STRAIGHT THD.
MS15002-1

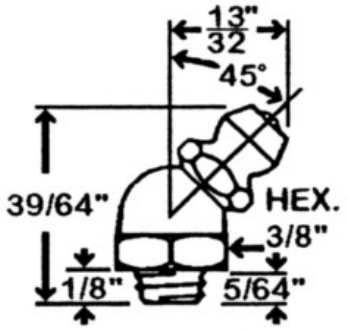

1/4"-28 UNF-2A
1/4"-28 STRAIGHT THD.
MS15002-3

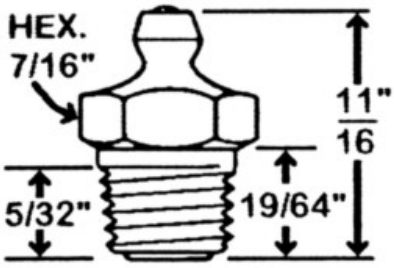

1/8" P.T.F*
MS15003-1

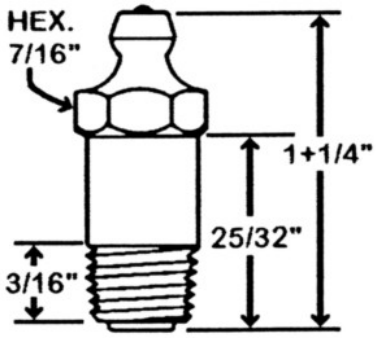

MS15003-2

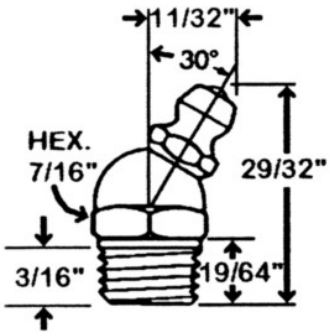

1/8" P.T.F*
MS15003-3

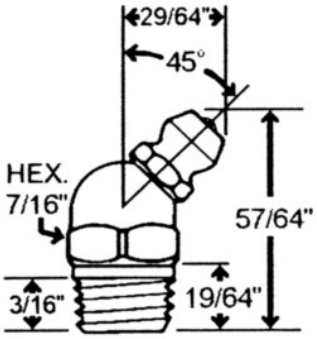

1/8" P.T.F*
MS15003-4

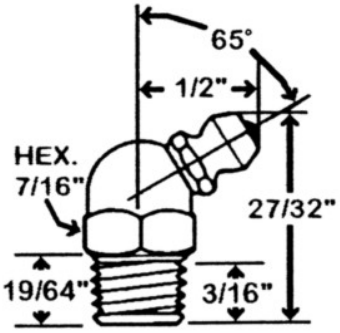

1/8" P.T.F*
MS15003-5

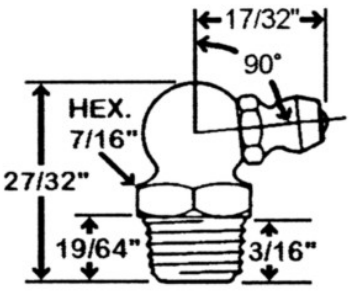

1/8" P.T.F*
MS15003-6

253-848-9349
SpencerAircraft.com

Spencer Aircraft provides the information in this catalog for its customers as a ***reference only*** and it is not intended for design or guarantee of accuracy. Though it is our policy to ship all orders in a timely manner, Spencer Aircraft cannot guarantee that all items will be in stock at all times.



BUTT SPLICES

PN / AMP	COLOR	WIRE SIZE
320559	Red	22-16
320562	Blue	16-14
320570	Yellow	12-10
323975	Clear	24-20
323994	Yellow	26-24



KNIFE SPLICES

PN / AMP	COLOR	WIRE SIZE
32446	Red	22-16
32448	Blue	16-14
35762	Yellow	12-10



END TERMINALS

PN / AMP	COLOR	WIRE SIZE
324485	Red	22-16
324486	Blue	16-14



Insulated Red Ring Terminals

PN / AMP	STUD SIZE	WIRE SIZE
31880	4	22-16
36152	6	22-16
31890	8	22-16
36154	10	22-16
31894	1/4	22-16



Insulated Blue Ring Terminals

PN / AMP	STUD SIZE	WIRE SIZE
328996	4	16-14
320619	6	16-14
320565	8	16-16



Insulated Yellow Ring Terminals

PN / AMP	STUD SIZE	WIRE SIZE
323914	4	26-22
323915	6	26-22
323994	8	26-22

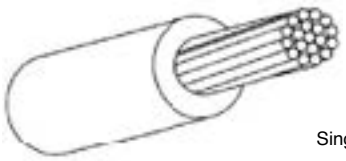

TEFZEL
1 Conductor
Non-Shielded
Tin Plated Copper
Single Layer of Extruded ETFE

M22759/16-GA-#

GA		Color Dash #
2	14	0 - Black
4	16	2 - Red
6	18	4 - Yellow
8	20	5 - Green
10	22	6 - Blue
12	24	9 - White

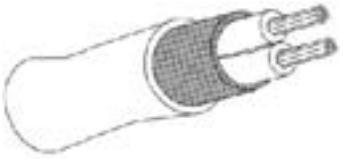

TEFZEL
Multi Conductor
Shielded
Tin Plated Copper
600V - WHITE

M27500

GA	Conductor
14	1
16	2
18	3
20	
22	
24	

MS25171

Terminals

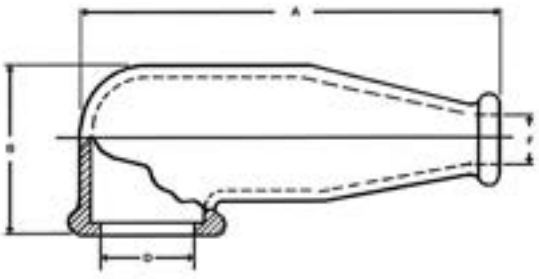

MS Part Number	"A" Maximum	+ "B"-.125	"D" Diameter	"F" Diameter
MS25171-1S	1.38	.56	.40	.16
MS25171-2S	2.5	1.00	.56	.31
MS25171-3S				.43
MS25171-4S				.56

NOTE: The MS25171-**#S** is made of Silicone to specification MIL-R-5847, Class II, Grade 50.

Spencer Aircraft provides the information in this catalog for its customers as a ***reference only*** and it is not intended for design or guarantee of accuracy. Though it is our policy to ship all orders in a timely manner, Spencer Aircraft cannot guarantee that all items will be in stock at all times.



Quality, Durability, and Reliability When You Need It



- 12-V
- Type: Sealed
- Weight: 29
- 1 hr (C1) 28
- 30 min (2C) 45
- Electrolyte: Not Needed

PN: 7035-28



- 12-V
- Type: Dry
- Weight: 21
- 1 hr (C1) 18
- 30 min (2C) 30
- 60 sec/0 deg F (CCA) 225
- Electrolyte: 2 Qts./1.285 s.g

PN: G25



- 12-V
- Type: Dry
- Weight: 27
- 1 hr (C1) 23
- 30 min (2C) 40
- 60 sec/0 deg F (CCA) 250
- Electrolyte: 3 Qts./1.285 s.g.

PN: G35



- 24-V
- Type: Sealed
- Weight: 93
- 1 Hr (C1) 53
- 30 Min (2C) 80
- Electrolyte: Not Needed

PN: 7638-44

Features & Benefits

- Best Shelf Life in Lead-Acid Chemistry
- Lower Weight
- Dependable
- Durable
- High Reliability through Engineered Processes
- Improved Energy Density
- Best Discharge and Recharge Efficiency in Valve-Regulated Lead-Acid
- Robust Construction
- Non-Spillable

...the heart of your aircraft®

CONCORDE®





253-848-9349
SpencerAircraft.com

Spencer Aircraft provides the information in this catalog for its customers as a ***reference only*** and it is not intended for design or guarantee of accuracy. Though it is our policy to ship all orders in a timely manner, Spencer Aircraft cannot guarantee that all items will be in stock at all times.

CHAMPION SPARK PLUG APPLICATION CHART

Engine Model	Standard Massive Electrode			Fine Wire Electrode	
	Shielded		Unshielded	Shielded	
	5/8-24	3/4-20		5/8-24	3/4-20
TELEDYNE CONTINENTAL MOTORS					
A-65 , A-75	REM40E	RHM40E	M41E	REM38S	RHM38S
C-75 , C-85 , C-90 , C-115 , C-125	REM40E	RHM40E	M41E	REM38S	RHM38S
E-165 , E-185 , E-225	REM40E	RHM40E	M41E	REM38S	RHM38S
E-165 , E-185 , E-225 (14mm Bushing)	REJ38				
O-200-A , -B , -C	REM40E	RHM40E	M41E	REM38S	RHM38S
GO-300 -A , -B , -C , -D , -E , -F O-300-A , -B , -C , -D , -E , C-145	REM40E REM38E	RHM40E REM38E	M41E	REM38S	RHM38S
IO-346 -A , -B	REM40E REM38E	RHM40E RHM38E		REM38S	RHM38S
IO-360 -A , -C , -D , -E , -G , -H , -J , -K	REM38E	RHM38E		REM38S	RHM38S
IO-360-B	REM40E	RHM40E		REM38S	RHM38S
TSIO-360 -A , -B , -C , -CB , -D , -DB , -E , -EB , -F , -FB , -G , -GB , -H , -HB , -K , -KB , -LB , -MB LTSIO-360 , -E , -EB , -K , -KB	REM38E	RHM38E		REM38S	RHM38S
O-470-2	REM38E	RHM38E		REM38S	RHM38S
O-470 -4 , -11 , -13 , -13A , -15	REM40E	RHM40E		REM38S	RHM38S
O-470 -A , -E , -J , -K , -L , -R , -S	REM40E	RHM40E		REM38S	RHM38S
O-470 -B , -G , -H , -M , -N , -P	REM40E REM38E	RHM40E RHM38E	REM38S	REM38S	
O-470 -T , -U		RHB32E			RHB36S RHB32S
IO-470 -C , -G , -P , -R , -T	REM40E REM38E	RHM40E RHM38E		REM38S	RHM38S
IO-470 -J , -K	REM40E	RHM40E		REM38S	RHM38S
IO-470 -D , -E , -F , -H , -L , -M , -N , -S , -U , -V , -VO , -LO		RHB32E			RHB36S RHB32S
GIO-470 -A		RHB32E			RHB36S RHB32S
LIO-470 -A	REM40E REM38E	RHM40E RHM38E		REM38S	RHM38S
TSIO-470 -B , -C , -D		RHB32E			RHB36S RHB32S
IO-520 -A , -B , -BA , -BB , -C , -CB , -D , E , -F , -J , -K , -L , -M , -MB , -N , -NB		RHB32E			RHB36S RHB32S
TSIO-520 -A , -B , -BB , -BE , -C , -CE , -D , -DB , -E , -EB-F , -G , -H , -J , -JB , -K , -KB , -L , -M , -N , -NB , -P , -R , -T , -U , -UB , -V , -VB , -WB , -AE , -AF , LTSIO-520-AE		RHB32E			RHB36S RHB32S
GTSIO-520 -C , -D , -E , -F , -G , -H , -K , -L , -M , -N		RHB32E			RHB36S RHB32S
TSIO-550 -A , -B , -C		RHB32E			
IO-550 -B , -C		RHB32E			RHB36S RHB32S
TSIOL-550 -A , -B		RHU32E			RHU32S**
6-285 -B , -BA , -C , -CA , 6-320 -A , -B		RHU27E			
W-670	REM40E	RHM40E	M41E	REM38S	RHM38S
R9A	REB37E	RHB37E		REB36S	RHB36S

Engine Model	Standard Massive Electrode			Fine Wire Electrode	
	Shielded		Unshielded	Shielded	
	5/8-24	3/4-20		5/8-24	3/4-20
TEXTRON LYCOMING					
O-145 , GO-145			M41E		
O-235 -C , -E , -H	REM40E REM38E REM37BY*	RHM40E	M41E	REM38S	RHM38S
O-235 -F , -G , -J				REM38S	
O-235 -K , -L , -M , -N , -P	REM40E REM38E REM37BY*	RHM40E RHM38E		REM38S	RHM38S
O-290 Series	REM40E	RHM40E	M41E	REM38S	RHM38S
O-320 -A , -C , -E	REM40E REM37BY*	RHM40E	M41E	REM38S	RHM38S
O-320 -B , -D , -H AIO-320 , LIO-320 -B IO-320-B , -C , -D , AEIO-320, -A , -B , -C , -D	REM40E REM38E REM37BY*	RHM40E RHM38E		REM38S	RHM38S
IO-320 -A , -D , -E AEIO-320 -E	REM40E REM37BY*	RHM40E		REM38S	RHM38S
IO-320 -C , -F , LIO-320 -C (Long Reach)	REB37E	RHB37E		REB36S	RHB36S
O-340 -A	REM40E REM38E	RHM40E RHM38E		REM38S	RHM38S
O-340 -B	REM40E	RHM40E		REM38S	RHM38S
O-360 -A , -C , -E , -F IO-360 -B , -E , -F , -H AEIO-360 -B , -C , -H , HO-360 -A	REM40E REM38E REM37BY*	RHM40E RHM38E		REM38S	RHM38S
O-360 -B , -D	REM40E REM37BY*	RHM40E		REM38S	RHM38S
IO-360 -A , -C , -D , -J , LIO-360 -E	REM38E REM37BY*	RHM38E		REM38S	RHM38S
LO-360-A1G6D, O-360-E1A6D LO-360-E1A6D LO-360-C	REM40E REM38E REM37BY*	RHM40E RHM38E		REM38S	REM38S
IO-360 -A , IO-360 -C1F IO-360-F (Long Reach) IVO-360	REB37E	RHB37E		REB36S	RHB36S
AIO-360 -A LIO-360 -C , AEIO-360-A	REM38E REM37BY*	RHM38E		REM38S	RHM38S
HIO-360 -A , -D	REM38E	RHM38E		REM38S	RHM38S
HO-360 -B , HIO-360 -A , -B	REM40E REM38E	RHM40E RHM38E		REM38S	RHM38S
TIO-360 -A , -B , AEIO-360 -A (Long Reach)	REB37E	RHB37E		REB36S	RHB36S
HIO-360 -E1AD , -E1BD , -F1AD LHIO-360 -F1AD , IVO-360 -A	REB32E	RHB32E			RHB32S
TO-360 -A1A6D , TO-360 -C1A6D TO-360 -E , TO-360 -F1A6D LTO-360 -A1A6D, LTO-360 -E	REB37E	RHB37E RHB32E		REB36S	RHB36S RHB32S
VO-360 -A , -B	REM40E REM38E	RHM40E RHM38E		REM38S	RHM38S
O-435 -A , -C	REM40E REM38E	RHM40E		REM38S	RHM38S
O-435 -K , K1	REM40E REM38E	RHM40E RHM38E		REM38S	RHM38S
GO-435 -C , -D Series	REM40E REM38E	RHM40E RHM38E		REM38S	RHM38S
VO-435 -A , TVO-435 -A (Short Reach)	REM38E	RHM38E		REM38S	RHM38S
VO-435 -A , -B (Long Reach) TVO-435 -A , -B , -C , -D , -E , -F , -G (Long Reach) O-435 -23 -25	REB37E REB32E	RHB37E RHB32E		REB36S	RHB36S RHB32S

*Use REM37BY when encountering lead fouling.

Spencer Aircraft provides the information in this catalog for its customers as a ***reference only*** and it is not intended for design or guarantee of accuracy. Though it is our policy to ship all orders in a timely manner, Spencer Aircraft cannot guarantee that all items will be in stock at all times.

CHAMPION SPARK PLUG APPLICATION CHART

Engine Model	Standard Massive Electrode			Fine Wire Electrode	
	Shielded		Unshielded	Shielded	
	5/8" - 24	3/4" - 20		5/8" - 24	3/4" - 20
Lycoming					
GO-480 -B , -D , -F	REM40E REM38E	RHM40E RHM38E		REM38S	RHM38S
GO-480 -C , -G (Short Reach)	REM38E	RHM38E		REM38S	RHM38S
GO-480 -G1 , -G2 (Long Reach)	RHB37E REB37E	RHB32E		RHB36S REB36S	RHB32S
GSO-480 -A , -B (Short Reach)	REM38E	RHM38E		REM38S	RHM38S
GSO-480 -A , -B (Long Reach)	REB37E	RHB37E		REB36S	RHB36S
IGSO-480 -A (Short Reach)	REM38E	RHM38E		REM38E	RHM38S
IGSO-480 -A (Long Reach) IGO-480 -A O-480 -1 -3	REB37E REB32E	RHB37E RHB32E		REB36S	RHB36S RHB325
O-540 -A , -D , -E , -F , -G , -H , -J	REM40E REM38E	RHM40E RHM38E		REM38S	RHM38S
O-540 -B	REM40E	RHM40E	M41E	REM38S	RHM38S
IO-540 -A , -B , -E , -G , -K , -L , -M , -P , -S , -U (Short Reach)	REM38E	RHM38E		REM38S	RHM38S
IO-540 -C , -D , -J , -N , -T , -V AEIO-540 -D , -L	REM40E REM38E	RHM40E RHM38E		REM38S	RHM38S
IO-540 -AA , -E , -G , -J , -K , -M , -P , -R , -S , -U O-540 -L3 C5D , M1B5D (Long Reach)	REB37E REB32E	RHB37E RHB32E		REB36S	RHB36S RHB32S
VO-540 -A , -B , -C (Short Reach)	REM38E	RHM38E		REM38S	RHM38S
O-540 -9 VO-540 Series IVO-540 Series (Long Reach)	REB37E	RHB37E		REB36S	RHB36S
IGO-540 -A , -B (Short Reach)	REM38E	RHM38E		REM38S	RHM38S
IGO-540 -A , -B (Long Reach)	REB37E	RHB37E		REB36S	RHB36S
TIO-540 -A , -C , -E , -F , -G , -H , -J , -K , -N , -R , -S , -T TIVO-540 -A	REB37E REB32E	RHB37E RHB32E		REB36S	RHB36S RHB32S
IGSO-540 -B (Short Reach)	REM38E	RHM38E		REM38S	RHM38S
IGO-540 -A , -B IGSO-540 -A , -B (Long Reach)	REB37E REB32E	RHB37E RHB32E		REB36S	RHB36S RHB32S
LTIO-540 -F , -J , -N , -R	RHB37E REB32E	RHB32E		RHB36S REB36S	RHB32S
TIO-541 -A , -E	RHB37E REB32E	RHB32E		RHB36S REB36S	RHB32S
TIGO-541 -A , -E	RHB37E REB32E	RHB32E		RHB36S REB36S	RHB32S
R-680	REM40E	RHM40E		REM38S	RHM38S
IO-720 -A , -B , -C , -D (Short Reach)	REM38E	RHM38E		REM38S	RHM38S
IO-720 -A , -B , -C , -D (Long Reach)	RHB37E REB32E	RHB32E		RHB36S REB36S	RHB32S
Pratt & Whitney					
R-985 (Wasp Jr.) R-1340 (Wasp)	REM37BY* REM40E	RHM40E	M41E	REM38S	RHM38S
R-1830 (Twin Wasp C) +For Severe Service	REB37E REB32E+	RHB37E RHB32E+		REB36S	RHB36S RHB32S+
R-2000 (Twin Wasp D)	REB37E	RHB37E		REB36S	RHB36S
R-2800 (Double Wasp) ++Rear position front row only	RHB37E RHB32E	RHB32E RHB29E+ +		RHB36S REB36S	RHB32S
R-4360 (Wasp Major)	REB37E	RHB37E		REB36S	RHB36S

Engine Model	Standard Massive Electrode			Fine Wire Electrode	
	Shielded		Unshielded	Shielded	
	5/8" - 24	3/4" - 20		5/8" - 24	3/4" - 20
Franklin Engine Co.					
2A4 Series	REJ38				
2A-120 -A , -B		RHB32E			RHB36S
4A4 Series	REJ38				
4AC Series	REJ38				
4A-235 -B		RHB32E			RHB36S
Sport 4 , 4A , 4A1 , 4B , 4R		RHB32E			RHB36S
6AC , 6AL , 6AG , 6A4 , 6V4 Series	REJ38				
6A4-200 , 6V4-200	REL37B				
6V6-245	REL37B				
6AB-215	REJ38				
6A-335 -A , 6V335 -A , -B	REL37B				
6A-335 -B , 6AS-335 -A		RHB32E			RHB36S
6V335 -A1A , A1B	REB37E	RHB37E		REB36S	RHB36S
6VS-335 -A , -B	RHB37E REB32E	RHB32S		RHB36S	RHB36S
6A-350 -C1 , -C2 , -D , -D1		RHB32E			RHB36S
6V-350 -A , -B		RHB32E			RHB36S
GROB					
2500 D 1/E1				REN30S	
JACOBS AIRCRAFT ENGINE CO					
L-4, L-5, L-6 Series R-755	REM40E	RHM40E		REM38S	RHM38S
R-755S, R-755 SM	REM38E				
KENROYCE-REARWIN					
All Models	REM40E	RHM40E	M41E		

*Use REM37BY when encountering lead fouling.

HOW TO INSTALL SPARK PLUGS:

Clean threaded spark plug holes in cylinder heads. Add new gasket and thread plug into cylinder by hand until seated against gasket. Spark plug threads may be coated very sparingly with anti-seize compound - start application at least one full thread away from the electrodes, otherwise the compound may run off and short out the plug. If plug will not turn all the way by hand, clean out threaded hole with a 14mm or 18mm thread cleaning tool. Place a 7/8" deep socket over the plug hex and tighten carefully with a torque wrench.

Plug/Engine Type	Foot LBS	Inch LBS
All 14mm spark plugs	**19-22**	**220-260**
18mm spark plugs:		
Avco Lycoming	30-35	360-420
Teledyne Continental	25-30	300-360
Franklin Engine Co	25-30	300-360
Pratt & Whitney Aircraft	25-30	300-360
Wright Aeronautical	35-40	420-480

Spencer Aircraft provides the information in this catalog for its customers as a ***reference only*** and it is not intended for design or guarantee of accuracy. Though it is our policy to ship all orders in a timely manner, Spencer Aircraft cannot guarantee that all items will be in stock at all times.

TEMPEST SPARK PLUG APPLICATION CHART

FAA-PMA Approved Engine Applications	Massive Electrode								Fine-Wire Electrode				
	5/8"-24 thread				3/4"-20 thread				5/8"-24 thread		3/4"-20 thread		
	UREB37E	UREM37BY	UREM38E	UREM40E	URHB32E	URHB37E	URHM38E	URHM40E	UREB36S	UREM38S	URHB32S	URHB36S	URHM38S
Textron Lycoming													
AEIO-320: D1B, D2B, E1A, E1B, E2A, E2B		x	x	x			x	x		x			x
AEIO-360: A2A, A2C	x	x	x	x			x	x	x	x			x
AEIO-360: A2B	x	x	x	x		x	x	x	x	x			x
AEIO-360: A1D, A1E	x	x	x			x	x		x	x			x
AEIO-360: B1D, B1F6, B2F6, H1A		x	x	x			x	x	x	x			x
AEIO-360: B1H									x	x			x
AEIO-360: A1C	x	x	x	x			x	x		x			x
AEIO-360: A1A, A1B, A1B6	x	x	x			x	x			x			x
AEIO-360: A1E6		x	x	x			x	x		x			
AEIO-360: B1B, B1F, B1G6, B2F, B4A, H1B		x	x	x			x	x		x			x
AEIO-540: D4B5			x	x			x	x	x	x			x
AEIO-540: D4A5, D4C5, D4D5, L1B5, L1B5D			x	x			x	x		x			x
AEIO-540: L1D5										x			x
AIO-320: A1B, A2A, A2B, B1B, C1B		x	x	x			x	x		x			x
AIO-320: A1A							x	x					
AIO-360: A1A, A1B, A2A, A2B		x	x	x			x	x		x			x
AIO-360: B1B		x	x	x			x	x					x
GO-435: C2, C2A, C2A2, C2B, C2B1, C2B2, C2C, C2D, C2E, D1		x	x	x			x	x		x			x
GO-480: G1A6	x				x	x					x	x	
GO-480: B, B1A6, B1B, B1C, B1D, C1B6, C1D6, C2C6, C2D6, C2E6, C3A6, D1A, F1A6, F2A6, F2D6, F3A6, F3B6, F4A6, F4B6, F6			x	x			x	x		x			x
GO-480: G1B6, G1D6, G1H6, G1J6, G2D6, G2F6			x				x				x	x	
GO-480: E1A6										x			x
GSO-480: A1C6, A2A6			x				x			x			x
GSO-480: B1A6, B1B3, B1B6, B1C6, B1E6, B1G6, B1J6, B2C6, B2D6, B2G6, B2H6			x				x						
GSO-480: A1A6										x			x
HIO-360: E1BD					x	x			x		x		
HIO-360: A1A, A1B, B1A, B1B		x	x	x			x	x		x			x
HIO-360: C1A, C1B, D1A			x				x			x			x
HIO-360: E1AD, F1AD					x	x					x		
HO-360: A1A, C1A		x	x				x			x			x
HO-360: B1A, B1B			x				x			x			x
IGO-480: A1A6, A1B6											x	x	
IGO-540: A1A, A1B, A1C, B1A, B1B, B1C	x				x	x				x	x	x	x
IGSO-480: 13/16" reach cyl.	x				x	x					x	x	
IGSO-480: 1/2" reach cyl.			x				x			x			x
IGSO-540: B1A, B1C	x				x	x				x	x		x
IGSO-540: A1A, A1C, A1D, A1E, A1F, A1H	x				x	x					x		
IO-320: F1A	x					x			x	x			x
IO-320: C1B		x	x	x			x	x	x	x			x
IO-320: A1A, A2A, B1A, B1B, B1C, B1D, B1E, B2A, D1A, D1B, D1C		x	x	x			x	x		x			x
IO-320: E1A, E1B, E2A, E2B		x		x			x	x		x			x
IO-320: 1/2" reach cyl.				x				x		x			x
IO-320: 13/16" reach cyl.						x							
IO-360: C1A	x					x			x	x			x
IO-360: F1A	x			x		x			x	x			x
IO-360: A1B6		x	x				x		x	x			x
IO-360: A1B6D	x					x				x			x
IO-360: A1A, A1B, A1C, A1D, A1D6, A1D6D, A2A, A2B, A2C, A3B6, A3D6D, C1B, C1C, C1C6, C1D6, C1E6, C1E6D, C1F, D1A, J1A6D, J1AD		x	x				x			x			x
IO-360: B1A, B1B, B1C, B1D, B1E, B1F, B1F6, B1G6, B2E-rd, B2E-wd, B2F, B2F6, B4A, E1A		x	x	x			x	x		x			x
IO-360: A3B6D		x	x				x			x			x
IO-360: K2A, L2A			x	x			x	x		x			x
IO-360: M1A				x						x			x
IO-360: C1G6													x
IO-540: P1A5, R1A5	x				x	x			x	x	x	x	x
IO-540: K1A5, K1A5D, K1B5D, K1C5D, K1H5, K1J5, K2A5			x	x			x	x	x	x	x	x	x
IO-540: K1C5, K1D5, K1E5D, K1F5, K1F5D, K1G5, K1J5D, K1K5			x	x			x	x	x	x			x
IO-540: E1A5, E1B5, E1C5, K1B5					x	x			x	x	x	x	x
IO-540: J4A5					x	x			x	x		x	x
IO-540: K1E5					x	x			x	x			x
IO-540: S1A5, U1A5D, U1B5D	x				x	x				x	x	x	x
IO-540: M1A5	x				x	x				x	x		x
IO-540: M1A5, M1A5D, M1B5D, M1C5, M2A5D	x				x	x				x			x
IO-540: AA1A5, AA1B5	x				x	x					x	x	
IO-540: G1A5, G1B5, G1C5, G1D5, G1E5, G1F5			x	x			x	x		x	x	x	x
IO-540: A1A5, AC1A5, B1A5, B1B5, B1C5, C1B5, C1C5, C2C, C4B5, C4C5, C4D5, C4D5D, D4A5, D4B5, D4C5, L1A5, L1A5D, L1B5D, L1C5, T4A5D, T4B5, T4B5D, T4C5D, V4A5D			x	x			x	x		x			x
IO-540: AB1A5, W1A5, W1A5D, W3A5D			x	x			x	x					
IO-540: C4B5D										x			x
IO-720: 13/16" reach cyl.	x				x	x					x	x	
IO-720: 1/2" reach cyl.			x				x			x			x
IVO-360: A1A	x				x	x					x	x	
IVO-540: A1A	x					x							
LHIO-360: C1A, C1B			x				x						
LHIO-360: F1AD					x	x							
LIO-320: C1A	x					x				x			x
LIO-320: B1A		x	x	x			x	x		x			x
LIO-360: C1E6		x	x				x			x			x
LO-360: A1G6D, A1H6		x	x	x			x	x		x			x
LO-360: E1A6D, E1AD, E2AD, E2BD			x	x			x	x		x			x
LTIO-540: F2BD, J2B, J2BD, N2BD, R2AD					x	x					x	x	
LTIO-540: K1AD, U2A, V2AD, W2A					x	x							
LTO-360: E1A6D	x				x	x					x	x	
LTO-360: A1A6D	x				x	x					x		
O-235: C1, C1A, C1B, C1C, C2A, C2B, C2C, E1, E1B, E2A, E2B, F1, F1B, F2A, F2B, G1, G1B, G2A, G2B, H2C, J2A, J2B, K2A, K2B, K2C, L2A, L2C, M1, M2C, M3C, N2A, N2C, P1, P2A, P2C, P3C		x	x	x			x	x		x			x
O-290: A, AP, B, C, CP, D2A, D2B, D2C		x	x	x			x	x		x			x
O-290: D, D2				x				x		x			x
O-320: D1A, D1B, D1C, D1D, D1F, D2A, D2B, D2C, D2F, D2G, D2H, D2J, D3G, E2A, E2C		x	x	x			x	x		x			x
O-320: A1A, A1B, A2A, A2B, A2C, A2D, A3A, A3B, A3C, B1A, B1B, B2A, B2C, B2D, B3A, B3B, B3C, C1A, C1B, C2A, C2B, C2C, C3A, C3B, C3C, E1A, E1B, E1C, E1F, E1J, E2B, E2D, E2F, E2G, E2H, E3D, E3H		x	x	x			x	x		x			x

FAA-PMA Approved Engine Applications	Massive Electrode								Fine-Wire Electrode				
	5/8"-24 thread				3/4"-20 thread				5/8"-24 thread		3/4"-20 thread		
	UREB37E	UREM37BY	UREM38E	UREM40E	URHB32E	URHB37E	URHM38E	URHM40E	UREB36S	UREM38S	URHB32S	URHB36S	URHM38S
Textron Lycoming													
O-320: H1AD, H1BD, H2AD, H2BD, H3AD, H3BD			x	x			x	x		x			x
O-320: B2B										x			x
O-340: A1A, A2A, B1A			x	x			x	x		x			x
O-360: A1A-rd, A1A-wd, A1AD, A1C, A1D, A1E, A1F6, A1F6D, A1G, A1G6, A1G6D, A1H, A1H6, A1J, A1P, A2A, A2D, A2E, A2F, A2G, A2H, A3A, A3AD, A3D, A4A, A4AD, A4D, A4G, A4J, A4K, A4M, A4N, A4P, A5AD, B1A, B1B, B2A, B2B, B2C, C1A, C1C, C1E, C1F, C1G, C2A, C2B, C2C, C2D, C2E, C4F, C4P, D1A, D2A, D2B, F1A6		x	x	x			x	x		x			x
O-360: E1A6D, E1AD, E1BD, E2AD, E2BD, G1A6, J2A			x	x			x	x		x			x
O-435: A, A2, C2			x	x			x	x		x			x
O-435: C, C1, K, K1			x				x			x			x
O-435: B										x			x
O-435: 1/2" reach cyl., 25											x		
O-540: L3C5D	x					x				x			x
O-540: [illegible]			x	x			x	x		x			x
O-540: D1A5										x			x
R-680: 2, 5, 6, B2, B4, B4B, B4C, B4D, B4E, B5, B6, D5, D6, E1, E2, E3, E3A, E3B				x				x		x			x
R-680: 4				x				x					
TIGO-541: B1A, C1A, D1A, D1B, E1A, G1AD					x								
TIO-360: A1A, A1B, A3B6, C1A6D	x					x							
TIO-540: A1A, A1B, A1C, A2A, A2B, A2C, C1A, E1A, F2BD, G1A, H1A, J2B, J2BD, K1AD, N2BD, R2AD, S1AD, T2AD, V2AD					x	x					x	x	
TIO-540: AA1AD, AB1AD, AB1BD, AE2A, AF1A, AF1B, AG1A, AH1A, AJ1A, W2A					x	x							
TIO-541: A1A, E1A4, E1B4, E1C4, E1D4	x				x	x							
TIVO-540: A2A					x	x					x		
TO-360: C1A6D, E1A6D, F1A6D	x				x	x					x	x	
TO-360: A1A6D	x				x	x					x		
TVO-435: A1A, C1A, D1A, E1A, F1A, G1A, G1B	x				x	x				x	x	x	x
TVO-435: B1B, D1B	x				x	x				x	x		x
TVO-435: 13/16" reach cyl.	x				x	x					x	x	
TVO-435: 1/2" reach cyl.			x				x			x			x
VO-360: A1A, A1B, B1A		x	x	x			x	x		x			x
VO-435: 13/16" reach cyl.	x				x	x					x	x	
VO-435: 1/2" reach cyl.			x				x			x			x
VO-540: A1A, A2A, B1A, B1B, B1B3, B1C, B1D, B1E, B1F, B1H, B2A, B2C, B2D, B2E, B2G, C1A, C1B, C1C3, C2A, C2B, C2C			x				x			x			x
Teledyne Continental Motors (TCM)													
A-65: 12, 12F, 12FJ, 12J, 14, 14F, 14FJ, 14J, 8FJ, 9, 9F, 9FJ, 9J		x		x				x		x			x
A-65: 1, 3, 6, 6J, 7, 8, 8F, 8J				x						x			x
A-75: 3, 6, 6J, 8, 8F, 8FJ, 8J, 9, 9J				x						x			x
C-115: 1, 2		x		x				x		x			x
C-125: 1, 2		x		x				x		x			x
C-145: 2, 2H, 2HP		x	x	x			x	x		x			x
C-75: 12, 12F, 12FH, 12FHJ, 12FJ, 12J, 15, 15F		x	x	x			x	x		x			x
C-75: 8, 8F, 8FH, 8FHJ, 8FJ, 8J				x						x			x
C-85: 14		x	x	x			x	x		x			x
C-85: 12, 12F, 12FH, 12FHJ, 12FJ, 12J, 14F, 15, 15F, 8, 8F, 8FHJ, 8FJ, 8J				x						x			x
C-90: 12F, 12FH, 12FJ, 12FP, 14F, 14FH, 14FJ, 16F, 8F, 8FJ				x						x			x
E-165: 2, 3, 4		x	x	x			x	x		x			x
E-185: 1, 10, 11, 2, 3, 5, 8, 9		x	x	x			x	x		x			x
E-225: 2, 4, 8, 9		x	x	x			x	x		x			x
FSO-470: A			x				x						
GIO-470: A					x								
GO-300: A, B, C, D, E, F		x	x	x			x	x		x			x
GTSIO-520: E					x						x		
GTSIO-520: C, D, F, H, K, L, M, N					x						x	x	
IO-240: A, B			x				x			x			x
IO-346: A, B			x	x	x		x	x		x			x
IO-360: B			x	x			x	x		x			x
IO-360: DB			x				x			x			
IO-360: A, AB, C, CB, D, E, ES, G, GB, H, HB, J, JB, K, KB			x				x			x			x
IO-470: A, C, G, J, K, P, R, T			x	x			x	x		x			x
IO-470: LO, VO					x						x		
IO-470: D, E, F, H, L, M, N, S, U, V					x						x	x	
IO-520: A, B, BA, BB, C, CB, D, E, F, J, K, L, M, MB, N, NB					x						x	x	
IO-550: D, E, F, G, L, N					x								
IO-550: A, B, C					x						x	x	
IOF-240: B			x				x						
IOF-550: B, C, D, E, F, L, N, P, R					x								
LIO-470: A			x	x			x	x		x			x
LIO-520: P					x								
LTSIO-360: E, EB, KB, RB			x				x			x			x
LTSIO-520: AE					x						x	x	
O-200: A, B, C				x						x			x
O-300: A, B, C, D, E		x	x	x			x	x		x			x
O-470: 11, 13, 13A, 15, 4		x	x	x			x	x		x			x
O-470: B, G, H, M, N, P, R, S			x	x			x	x		x			x
O-470: 2			x				x			x			x
O-470: B-C1, G-C1, K-C1, L-C1, M-C1			x	x			x	x					
O-470: 11-C1, 11B, 11B-C1, A, E, J, K, L				x				x		x			x
O-470: T, U					x						x	x	
R-670: 11, 11A, 3, 4, 5, 8, A, B, C, D, E, F, G, H		x		x				x					
R-9: A	x					x							
TSIO-360: A, AB, B, C, D, DB, E, EB, F, FB, G, GB, H, HB, JB, KB, LB, MB			x				x			x			x
TSIO-360: SB, CB, NB, PB, RB, SB			x				x						
TSIO-470: B, C, D					x						x	x	
TSIO-520: LB					x								
TSIO-520: A, AF, BB, BE					x						x		
TSIO-520: AE, B, C, CE, D, DB, E, EB, G, H, J, JB, K, KB, L, M, N, NB, P, R, T, U, UB, VB, WB					x						x	x	
TSIO-550: A, B, C, E					x								
W-670: 16, 23, 24, 6A, 6M, K, M		x		x				x		x			x

Not a complete list. To find the right Tempest Aviation Spark Plugs for your engine, see our complete application guide & engine cross reference at http://tempestplus.com

LORD ENGINE MOUNTS FOR YOUR AIRCRAFT APPLICATION

MODEL	LORD	NO. PER A/C	SPECIAL INFORMATION
BELLANCA			
17-30A	J-12453-1 / -2	2 ea.	S/N 30847 & UP
17-31, 17-31A, 17-TC, ATC	J-9868-5	4	
7ECA	J-6230-1	4	Citabria (1967 on)
7GCAA, 7GCBC, 7KCAB	J-6230-1	4	
8KCAB, -180, -CS, -FP	J-6230-1	4	
CESSNA			
150, 150A-F, F150	SE-1051-3	1	NLG Damper (Early Models)*
152, 152 Aerobat	J-7402-1	4	S/N 15279406-85594
152, 152A, 172	SE-1051-2	1	NLG Damper*
172 I-P	J-9613-49	4	
172Q	J-9613-49 / -72	2 ea.	S/N 17275869 on
172R, S	J-9613-82	4	*
172RG	J-9613-49 / -72	2 ea.	
R172E, K	J-9613-42 / -12	2 ea.	S/N R172-0302 to -0335
177, A-B	J-9613-49	4	
177RG	J-9613-59	4	
180	J-3804-14 / -15	2 ea.	S/N 30002-32150
180, 180A-H	J-6545-1	4	
182, 182A-R	J-6545-1	4	
182 (new)			
T182, TR182	J-9613-12	4	
185, 185A-E	J-6545-1	4	
A188B	J-15198-1 / -2	2 ea.	S/N 18802349 & UP
T188	J-15198-2 / J-6545-6	2 ea.	S/N T1883297T & UP
205, 205A	J-6545-1	4	
206 (new)			
P206, P206A-E	J-12453-1 / -2	2 ea.	
TU206A-F	J-12453-1 / -2	2 ea.	
U206	J-12453-1 / -2		
207, 207A, 207A II	J-12453-1 / -2	2 ea.	
208	LM-600-60 (Spacer)	3	*
208	LM-600-9 (Sand)	6	*
210, 210A-C	J-6545-1	4	
210D-L	J-12453-1/-2	2 ea.	
P210R	J-12453-1/-2	4/2	
T210F-L	J-12453-1/-2	2 ea.	
T210M, N	J-12453-1/-2/SPEC	2/1/1	SPEC is Cessna part
310J-Q	J-12390-1	8	
310R, T310	J-9613-58	8	
320, 320A-C	J-7764-4	8	
320D-F	J-9613-31 or -58	8	2 Con TSI0-520-B, BB
335	J-9613-58	8	
336	J-7764-10	8	
337, 337A-H, P337H	J-9613-31	8	
T337B-G	J-9613-31	8	
340, 340A	J-9613-58	8	
401, 401A, B	J-9613-58	8	
402, 402A, B, C	J-9613-58	8	
404	J-9613-54	8	
414, 414A	J-9613-58	8	
421, A, B, C	J-9613-54	8	
425	LM-600-20 (Spacer)	6	*
425	LM-600-9 (Sand)	12	*
441	200PE1210-45	2	*
441	LM-600-12 (Spacer)	6	*
441	LM-600-9 (Sand)	12	*
500/501	LM-420-SA5 / -SA6	4 / 2	*
550/551	LM-420-SA23/30/31	2 ea.	*

MODEL	LORD	NO. PER A/C	SPECIAL INFORMATION
GULF AMERICAN			
AA-1	J-6113	8	
AA-1C, AA-5, AA-5A	J-7402-24	4	
AA-5B	J-9613-49	4	S/N 0001-0399
AA-5B, AG-5B	J-9613-59	4	S/N 0399 & up
AA-IA, B	J-6113-5	8	
GA-7	J-9613-49	8	
111,112,112B, 112T, 112TCA	J-9613-40 / -53	2 ea.	
500	J-3804-20	8	
LEARJET			
28, 29	LM-308-SA4	2	*
23, 24, 24D/E, 28, 29	LM-308-19, -33	4/ 2	*
23, 24	LM-308-SA4	2	*
24D, E	LM-308-SA4	2	*
35, 35A, 36, 36A	LM-833-SA4 / -SA5	4/ 2	
MAULE			
M-4-210, -210C, S, T, M-5-210C	J-7764-10	4	
M-5-235C, M-6- 235	J-7764-20	4	
MOONEY			
M20B	J-7402-1	4	S/N 1701 to 1939
M20C	J-7402-1	4	S/N 1940 to 20-1258
M20D	J-7402-1	4	S/N 101-260
M20E	J-7402-16	4	S/N 101 to 470
M20E	J-9613-12	4	S/N 471 to 21-1180
M20F	J-9613-12	4	S/N 1 thru 22-1438
M20G (1968 - 70)	J-7402-1	4	680001 to 700006
M20Jv	J-9613-40	4	S/N 24-0001 & up
M20K (1979 - 85)	J-9613-58	4	1 Con TSI0-360-GB1
M20K (1979 - 85)	J-9613-75 / -76	1 / 3	1 Con TSI0-360-GB3 or -MB1
M20 various	J-11968-14		Landing Gear Shock
PIPER			
620 XL, -31T2	LM-423-SA1, -SA12	2	
PA-23-250	J-3804-20	8	S/N 27-1 to 27- 2504
PA-23-250	J-9613-12	8	
PA-23-250T	J-9613-12	8	
PA-24-250	J-3804-20	4	S/N 24-103 up
PA-24-250	J-3804-41	4	w/McCauley Prop STC
PA-24-260	J-3804-20	4	S/N 24-33642/400-4782
PA-24-400	J-9613-24 / -9	2 ea.	
PA-25-235	J-3804-20	4	
PA-25-260	J-3804-20	4	
PA-28-140	J-7402-16	4	S/N 20002-24999
PA-28-140	J-9613-40 / -53	2 ea.	S/N 7, 225, 001 & up, 25000-7,125, 641
PA-28-150	J-7402-16	4	
PA-28-150	J-7402-24	4	

**From original position (see installation drawing)*

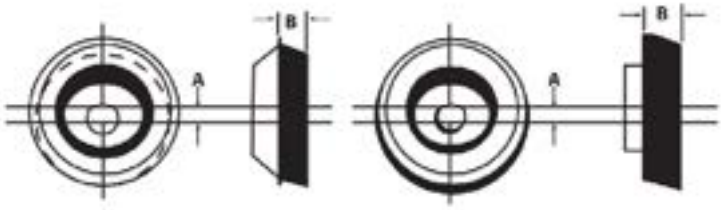

253-848-9349
SpencerAircraft.com

Spencer Aircraft provides the information in this catalog for its customers as a ***reference only*** and it is not intended for design or guarantee of accuracy. Though it is our policy to ship all orders in a timely manner, Spencer Aircraft cannot guarantee that all items will be in stock at all times.

LORD ENGINE MOUNTS FOR YOUR AIRCRAFT APPLICATION

MODEL	LORD	NO. PER A/C	SPECIAL INFORMATION
PIPER (continued)			
PA-28-151	J-9613-40 / -53	2 ea.	
PA-28-160	J-7402-16	4	S/N 1-507
PA-28-160	J-7402-24	4	S/N 28-1479 to 1760
PA-28-161	J-9613-40 / -53	2 ea.	
PA-28-180	J-7402-16	4	S/N 1761-4377
PA-28-180	J-7402-24	4	S/N 330-5149
PA-28-180	J-9613-40	4	S/N 5150 & up
PA-28-181	J-9613-40	4	
PA-28-236	J-9613-12	4	
PA-28R-180	J-9613-40	4	S/N 30001 & up
PA-28R-200	J-9613-40	4	S/N 35001 & up
PA-28R-201	J-9613-40	4	S/N 28R-7737002 &up
PA-28R-201T	J-9613-58	4	
PA-28S-160	J-7402-16	4	S/N 508-1478, 1761-4377
PA-30	J-9613-19	8	
PA-31	J-9613-12	8	
PA-31-300	J-9613-30	8	
PA-31-310	J-9613-12	8	
PA-31-325	J-9613-12	8	*
PA-31-350	J-9613-29	8	*
PA-31T-1, -500, -620	LM-423-SA1 / SA12	4 / 2	
PA-32-260	J-3804-27	4	S/N 32-570 & up
PA-32-260	J-7402-20	4	S/N 32-1 to 32-569
PA-32-300	J-3804-27	4	S/N32-40001 to 32-7240055
PA-32-300	J-3804-40	4	S/N 7240056 & up
PA-32-301	J-9613-12 / -19	2 ea.	
PA-32R-300	J-3804-31	4	S/N 32R7680001 & up
PA-32R-300	J-3804-40	4	S/N 32R7680141 & up
PA-32R-301	J-9613-12 / -19	2 ea.	
PA-32RT-300	J-3804-40	4	
PA-32RT-300T	J-3804-37 / -39	2 ea.	
PA-34-200	J-9613-40	4	
PA-34-200, 200T	J-9613-58	4	
PA-38-112	J-7402-16	4	
PA-39	J-9613-19	8	
PA-44-180T	J-9613-40	8	
PA-46-310P MALIBU	J-9613-55	4	8408001-87, 8508109- 109, 4608001-140
PA-46-350P	J-9613-55	4	S/N 4622001 & up
RAYTHEON			
E18S-H18S	J-5384-1 / J-5385-1	4 ea.	
19A, M19A, B19	J-7402-16	4	
A23, A23-24	J-10778-4	4	
C-23	J-7402-16	4	
24, A24/R, B24R, C24R	J-10778-14 / -16	2 ea.	
J-10778-14 / -16	J-7518-2	4	
E33A, C, F33A, C, G33	J-10520-1	4	
35, A35, B35	J-2245-1	8	
E35, F35, G35	J-3049-17	8	
H35 thru P35	J-7518-2	4	
S35, T35, V35A, V35B / TC	J-10520-1	4	
36, A-36	J-10520-1	4	
A36TC	J-10520-1	4	
B50, C50	J-3804-10	8	
E50, F50, G50, H50, J50	J-6545-1	4	
55, A55, B55	J-7518-2	4	S/NTC1 to TC15
55, A55, B55, B55A	J-9613-5	4	S/N TC176 thru TC-1254
C55, C55A, D55, D55A, E55, E55A	J-10778-16	8	
56TC, A56TC	J-9613-9	8	
58	J-10778-16	8	
58P, 58TC	J-12453-12	8	
60, A60, B60	J-9613-9	8	

MODEL	LORD	NO. PER A/C	SPECIAL INFORMATION
RAYTHEON (continued)			
65, A65	J-6545-1	8	
70	J-6545-1	8	
76, 76TC	J-9613-49 / -50	2 ea.	
77	J-7402-1	4	
80, A80, B80	J-6545-1	4	
95, B95, B95A	J-7402-1	8	
D95A, E95	J-7402-1	8	
C90, C90A	LM-427-SA7	6	
E90, F90, A100	LM-427-SA7	6	
C90, E90, C99	LM-427-SA12	3	Overhaul Kit for Barry Controls P/N 5906-2SA9
200, 200C, 200CT, A200, A200C/CT, B200, B200C/CT/T	LM-427-SA12	4	Overhaul Kit for Barry Controls P/N 5906- 2SA9
MU-2B-20	LM-821-SA40/- SA41	4 / 2	S/N 224 & up
MU-2B-25/-26	LM-821-SA47 / -SA48	4 / 2	S/N 280 & up
MU-2B-60	LM-821-SA47 / -SA48	4 / 2	all effective S/N
MU-300, MU-300-10	LM-420-SA15 / -SA16	4 / 2	
400	LM-420-SA15 / -SA16	4 / 2	

Maintenance of Bonded Mountings & Assemblies

Mounting Series Number	Eccentricity Max. “A”	Thickness Min. “B”
J1552	0.05	0.29
J2245	0.06	0.45
J3049	0.07	0.71
J6113	0.05*	0.39
J7401	0.06	0.75
J7530	0.06*	0.75
J7649	0.06*	0.75
J7763	0.08	1.02
J8381	0.06	0.75
J9555	0.06*	0.75
J9612	0.08	1.22
J10533	0.10*	0.80
J10776	0.10*	1.01
J12165	0.20	1.00
J12397	0.20	0.86
J12454	0.20	1.30
J12799	0.20	1.28
J13051	0.23	1.40
J15199	0.40	1.60
J7763-34(BTR-II)	0.14	1.02
J9612-30 (BTR-II)	0.14	1.20
J9612-32 (BTR-II)	0.12	1.20

**From original position (see installation drawing)*

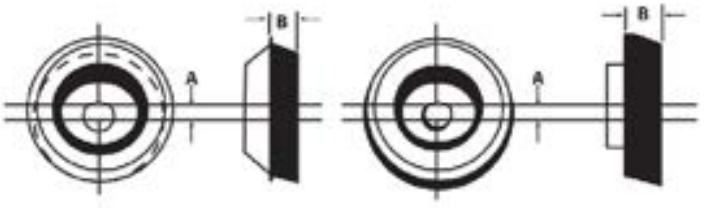

Spencer Aircraft provides the information in this catalog for its customers as a ***reference only*** and it is not intended for design or guarantee of accuracy. Though it is our policy to ship all orders in a timely manner, Spencer Aircraft cannot guarantee that all items will be in stock at all times.

LORD ENGINE MOUNTS FOR YOUR AIRCRAFT APPLICATION

Aircraft Applicability

LORD PART NUMBER	AIRCRAFT APPLICABILITY	PMA SUPPLEMENT
SE-1051-2 Replaces Cessna P/N 0442512-1 and 0542119-1 for models listed	CESSNA 150G, H, J, K, L, M F150G, H, J, K, L, M, A150K, L, M, FA150K, L FRA150L, FRA150M 152 (ALL) 1978 thru 1985 (no letter designators) F152 (ALL) 1978 thru 1984 (no letter designators) A152 (ALL) 1978 thru 1985 (no letter designators) FA152 (ALL) 1978 thru 1984 (no letter designators) 172, 172 A, B, C, D, E, F, G, H, I, K, L, M, N, P, Q, R, S F172D, E, F, G, H, K, L, M, N, P P172D, FR172E, F, G, H, J (REIMS ROCKET) R172K, FR172K 175, 175A, B, C 182B, C, D	102
SE-1051-3 Replaces Cessna P/N 0442512-2 and 0542119-2 for models listed	CESSNA 150, 150A, B, C, D, E, F	67 Amendment 1
SE-1068-5 Replaces Cessna P/N 0743624-1 for models listed	CESSNA 182K, L, M, N, P, Q, R, S, T, T182T	91
SE-1069-3 Replaces Cessna P/N 0743624-2 for models listed	CESSNA 206H, U206B, U206C, U206D, U206E, U206F, U206G, TU206B, TU206C, TU206D, TU206E, TU206F, TU206G, TU206H, P206B, P206C, P206D, P206E 207, 207A, T207, T207A 210G, 210H, 210J, 210K, 210L, 210M, 210N, 210R, T210K, T210L, T210M, T210N, P210N, P210R	83
SE-1070-7 Replaces Cessna P/N 2643090-3 for models listed	CESSNA C208, C208A, C208B	96
SE-1076-1 Replaces Hawker Beechcraft P/N(s): 35-825145, 35-825145-2, and 35-825145-6	HAWKER BEECHCRAFT 58P, 58TC 35-33, 35-A33, 35-C33A, E33C, F33, F33A, F33C, G33, H35, J35, K35, M35, N35, P35, S35, V35, V35A, V35B, 36, A36, A36TC, B36TC 95-55, 95-A55, 95-B55, 95-C55, 95-C55A, G58, D55, D55A, E55, 58 35, A35, B35, C35, D35, E35, F35, G35	103
SE-1088-1	CESSNA CARDINAL 177, 177A, 177B	112
SE-1090-1 Replaces Cessna P/N 0842410-2 for models listed S/N 0001-0710 for 182 models	CESSNA 310, 310B, 310C, 310D, 310F, 310G, 310H, 3101, 310J, 310K, 310L, 310N, 310P, T310P, 310R, T310R, 320, 320A, 320B, 320C, 320D, 320E, 320F, 335, 340, 340A, 401, 401A, 401B, 402, 402A, 402B, 402C, 411, 411A, 414, 414A, 421, 421A, 421B, 421C, 425, 404, 406, 441, R182, TR182, FR182	104
SE-1508-1 Replaces Piper P/N 456-015 for models listed	PIPER PA-28 PA-28-140, PA-28-140B, PA-28-140C, PA-28-140D, PA-28-140E, PA-28-140 Cruiser, PA-28-150, PA-28-150B, PA-28-150C, PA-28-160, PA-28-160B, PA-28-160C, PA-28- 180, PA-28-180B, PA-28-180C, PA-28-180D, PA-28-180E, PA-28-180F, PA-28-180G, PA-28-180 Challenger, PA-28-180 Archer, PA-28-181, PA-28-181 Archer II, PA-28-181, Archer III, PA-28-181 Archer LX	124
SE-1508-2 Replaces Piper P/N 456-015 for models listed	PIPER PA-28 PA-28-151, PA-28-161, PA-28-161 Warrior II, PA-28-161 Warrior III, PA-32-301 Saratoga, PA-32-301T Saratoga, PA-32-301XTC, PA-32-301FT 6X	124

Spencer Aircraft provides the information in this catalog for its customers as a ***reference only*** and it is not intended for design or guarantee of accuracy. Though it is our policy to ship all orders in a timely manner, Spencer Aircraft cannot guarantee that all items will be in stock at all times.

PLUG WILKIE BUTTONS





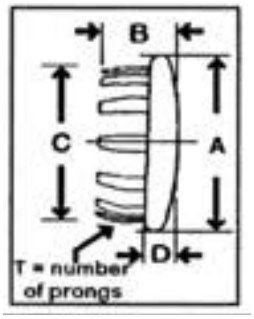

United CARR NO.	NAS NO.	HOLE SIZE	MATERIAL THICKNESS	A		C	D	T	MATERIAL
48148	NAS451-39	.125	.050-.078	.328	.203	.141	.062	4	1010 Steel
50709	NAS451-40	.266	.037-.078	.438	.359	.281	.188	6	Brass
51034	NAS451-3	.312	.062-.078	.438	.250	.328	.062		1010 Steel
48149	NAS451-41	.344	.093-.125	.531	.344	.375	.094		
51087	NAS451-5	.356	.025-.093	.562	.266		.078		
48192	NAS451-6	.375	.050-.062	.500	.219	.391	.062		
51076	NAS451-7				.234				
51003	NAS451-8	.391	.078-.090			.406			
51043	NAS451-10	.438	.037-.062	.656	.219	.469	.078	8	
51051	NAS451-11	.469	.083-.125	.625	.359	.484	.062		
51057	NAS451-42								Brass
51007	NAS451-12		.125-.171		.375			6	1010 Steel
48152	NAS451-43	.500	.037-.062	.656	.266	.531	.078	8	
48157	NAS451-13	.531	.125-.156	.688	.375	.547			
51067	NAS451-16	.625	.062-.078	.797	.218	.641			1045 Steel
50809	NAS451-44								Brass
51142	NAS451-45		.109-.125		.312	.656			1010 Steel
50727	NAS451-46	.688	.037-.062	.875	.266	.703		12	
51083	NAS451-57	.734			.281	.750			1045 Steel
51026	NAS451-14	.750	.037-.093	.938	.297	.766	.094		1010 Steel
50580	NAS451-47								Brass
48165	NAS451-48		.109-.125		.359				1010 Steel
51045	NAS451-18	.812	.046-.078	1.047	.281	.844	.078		
50685	NAS451-49	.875	.125-.171	1.062	.359	.906			
48155	NAS451-56		.062-.093		.296	.890	.062		
48189	NAS451-20	.906	.031-.062	1.000	.344	.922	.125		
51052	NAS451-21		.037-.062	1.062	.312				
51048	NAS451-22		.050-.062		.297		.078		
51105	NAS451-23	.938	.062-.078	1.156	.281	.969	.062		Brass
51049	NAS451-24	.953	.093-.109	1.187	.406		.125		1010 Steel
51078	NAS451-25		.102-.125	1.000	.359				
50707	NAS451-50	.984	.045-.062	1.156	.297	1.000	.094		Brass
48143	NAS451-51	1.000	.052-.078			1.031	.078		1010 Steel
50733	NAS451-52		.062-.078						
48166	NAS451-53		.109-.125		.375				
48174	NAS451-26	1.125	.050-.078	1.312	.344	1.141	.094		
48133	NAS451-27	1.156	.037-.078	1.344		1.172			
48183	NAS451-28	1.187	.062-.078	1.438	.297	1.203	.078		
51051	NAS451-29	1.219	.037-.078		.328	1.234			
51021	NAS451-30	1.250			.344	1.266	.094		1045 Steel
51058	NAS451-31	1.375	.037-.044	1.562	.406	1.391	.409		1010 Steel
48132	NAS451-54		.125-.140				.094		
50834	NAS451-55	1.500	.037-.062	1.641		1.531			
50841	NAS451-33	1.625	.062-.109	1.797	.344	1.656	.125		
50890	NAS451-58	1.750	.037-.093	1.938		1.781			
48193	NAS451-61								Brass
51164	NAS451-60	1.781	.045-.093		.438	1.812	.094		1010 Steel
51020	NAS451-34	1.875	.062-.140	2.188	.500	1.891	.219	14	
48175	NAS451-35	2.000	.037-.125	2.312		2.031			
51056	NAS451-36	2.500	.037-.078	2.562		2.281			
51111	NAS451-37		.037-.109	2.812	.344	2.531	.094	16	
48197	NAS451-38	3.000	.140-.156	3.312	.641	3.062	.034	12	

Spencer Aircraft provides the information in this catalog for its customers as a ***reference only*** and it is not intended for design or guarantee of accuracy. Though it is our policy to ship all orders in a timely manner, Spencer Aircraft cannot guarantee that all items will be in stock at all times.

TAPERED CAPS & PLUGS

COMPARISON CHART

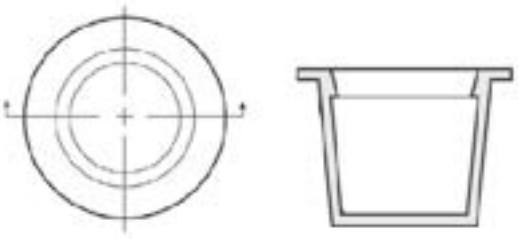

T-SERIES CAPLUG #	OLD SPENCER #	NIAGARA #	ALLIANCE #
T-00	S-1	234-A	1
T-0	S-2	235-C	2
T-235-V	--	--	3
T-235-T	--	--	4
T-1	S-3	236-X	5
T-1X	S-4	236-L	6
T-2	S-5	237-Y	7
T-2S	S-6	--	--
T-2X	S-7	229-Z	8
T-3	S-8	238-D	9
T-3X	S-9	239-E	10
T-4	S-10	181	11
T-4X	S-11	240	12
T-5	S-12	189	13
T-5X	S-13	189-2	14
T-6	S-14	241	16
T-6X	S-16	188	17
T-7	S-17	242	18
T-7X	S-18	242-2	20
T-8	S-19	243	21
T-8X	S-20	191	22
T-9	S-21	203	23
T-9X	S-23	245	26, 26-L
T-10	S-24	246	27
T-11	S-25	204	28
T-11X	S-26	247	29
--	--	192-1	30
T-12	S-27	192-2	31
T-12X	S-28	248	35
--	--	249-1	38
T-13	S-29	249	40
--	--	249-2	K-85
T-13X	S-30	153	41
T-14	S-31	193	42
T-14X	S-32	250	44
T-15S	S-33	251	45
T-15X	S-34	205	46
T-15	S-35	252	47
--	--	252-2	48
T-16	S-36	253	49
--	--	253-2	51
T-17	S-37	254	53
T-17S	S-38	194	54
T-18	S-39	194-F	55
T-18X	S-40	255	56
T-19	S-41	196	57

T-SERIES CAPLUG #	OLD SPENCER #	NIAGARA #	ALLIANCE #
T-20	S-42	206	58
T-20S	S-43	197-P	59
T-210	S-44	256	60
T-21	S-45	257	62
T-220	S-46	258	63
T-22S	S-47	259	65
T-221	S-48	260	66
T-25A	S-51	262	70
S-24S	S-50	198-P	68
T-230	S-49	261	67
T-708	S-52	207	71
T-33A	S-55	265	75
T-250	S-53	263	73
T-33A1	S-54	264	74
T-43A	S-56	266	76
T-43X	S-57	267	77
T-44	S-58	199	78
T-45A	S-59	208	81
T-500	S-60	268	82
T-53	S-61	228	83
T-55A	S-62	269	85
T-57A	S-63	270	86
T-97A	S-65	209	88
T-502	S-68	303	91
T-1050	S-66	338	89
T-1052	S-67	339	90
T-1063	S-69	340	92
T-1064	S-70	405	93
T-1070	S-71	406	94
T-1072	S-72	342	95
T-1076	S-73	343	--
T-1080	S-74	407	--
T-1086	S-75	344	--
T-1088	S-76	345	--
T-1092	S-77	346	--
T-1097	S-78	351	--
T-1103	S-79	352	--
T-1107	S-80	365	--
T-1109	S-81	366	--
T-1110	S-82	367	--
T-1120	S-83	368	--
T-1128	S-84	369	--
T-390	S-86	390	--
T-1139	S-87	370	--
T-1314	--	--	--
--	--	--	--

253-848-9349
SpencerAircraft.com

Spencer Aircraft provides the information in this catalog for its customers as a ***reference only*** and it is not intended for design or guarantee of accuracy. Though it is our policy to ship all orders in a timely manner, Spencer Aircraft cannot guarantee that all items will be in stock at all times.

PLASTIC CAPS & PLUGS

Caps & Plugs for NON-Threaded Pipe

Size (inches)	Schedule 40 Pipe Cap		Schedule 40 Pipe Plug		Schedule 80 Pipe Cap		Schedule 80 Pipe Plug	
	Old #	*Caplug #*	*Old #*	*Caplug #*	*Old #*	*Caplug #*	*Old #*	*Caplug #*
1/8	S-11	T-4X	S-3	T-1	S-11	T-4X	S-2	T-0
1/4	S-16	T-6X	S-7	T-2X	S-16	T-6X	S-4	T-1X
3/8	S-21	T-9	S-11	T-4X	S-21	T-9	S-9	T-3X
1/2	S-26	T-11X	S-17	T-7	S-26	T-11X	S-14	T-6
3/4	S-31	T-14	S-24	T-10	S-31	T-14	S-21	T-9
1	S-36	T-16	S-29	T-13	S-36	T-16	S-28	T-12X
1-1/4	S-40	T-18X	S-36	T-16	S-40	T-18X	S-33	T-15
1-1/2	S-45	T-21	S-39	T-18	S-45	T-21	S-37	T-17
2	S-53	T-250	S-46	T-220	S-53	T-250	S-45	T-21
2-1/2	S-59	T-45A	S-53	T-250	S-59	T-45A	S-51	T-25A
3	S-66	T-1050	S-61	T-53	S-66	T-1050	S-59	T-45A
3-1/2	S-70	T-1064	S-65	T-97	S-70	T-1064	S-65	T-97A
4	S-72	T-1072	S-69	T-1063	S-72	T-1072	S-68	T-502
5	S-76	T-1088	S-74	T-1080	S-76	T-1088	S-73	T-1076
6	S-80	T-1107	S-78	T-1097	S-80	T-1107	S-77	T-1092
8	CE-324		S-84	T-1128	CE-324		S-82	T-1110

Caps & Plugs for Threaded Pipe

Size	Tapered Plug NPT		Tapered Cap NPT		Threaded Pipe Plug		Cap NPT	
	Old #	*Caplug #*	*Old #*	*Caplug #*	*Old #*	*Caplug #*	*Old #*	*Caplug #*
1/8	S-7	T-2X	S-10	T-4	TP-1	TPN-1		
1/4	S-10	T-4	S-14	T-6	TP-3	TPN-3		CE-309
3/8	S-16	T-6X	S-20	T-8X	TP-5	TPN-5	RRC-3/8	CE-310
1/2	S-21	T-9	S-25	T-11	TP-7	TPN-7	RRC-1/2	CE-311
3/4	S-28	T-12X	S-29	T-13	TP-9	TPN-7	RRC-3/4	CE-312
1	S-31	T-14	S-34	T-15X	TP-11	TPN-11	RRC-1	CE-313
1-1/4	S-38	T-17	S-39	T-18	TP-13	TPN-13	RRC-1-1/4	CE-314
1-1/2	S-43	T-20	S-42	T-20	TP-15	TPN-15	RRC-1-1/2	CE-315
2	S-50	T-24	S-52	T-708			RRC-2	CE-316
2-1/2	S-58	T-44	S-59	T-45A			RRC-2-1/2	CE-317
3	S-61	T-53					RRC-3	CE-318
3-1/2	S-66	T-1050					RRC-3-1/2	CE-319
4	S-69	T-1063					RRC-4	CE-320
5	S-74	T-1080					RRC-5	CE-321
6	S-78	T-1097					RRC-6	CE-322
8	S-84	T-1128					RRC-8	CE-324

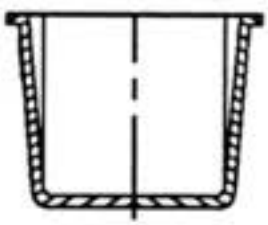

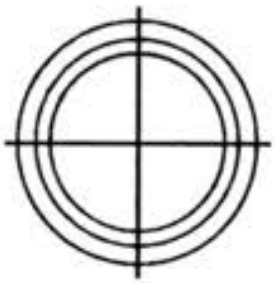

This is just a small selection of the commonly used Caplugs.

We offer so many more specific caps. Just ask us!

Spencer Aircraft provides the information in this catalog for its customers as a ***reference only*** and it is not intended for design or guarantee of accuracy. Though it is our policy to ship all orders in a timely manner, Spencer Aircraft cannot guarantee that all items will be in stock at all times.

PLASTIC CAPS & PLUGS

COMPARISON CHART

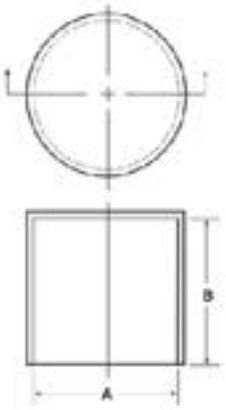

SC SERIES CAPLUG #	OLD SPENCER #	NIAGARA #	ALLIANCE #
SC-7/32	S-101-6	214-J	--
SC-1/4-14	S-101-8	214-E	--
SC-5/16	S-101-10	215-F	--
SC-3/8	S-101-11	216-H	--
SC-7/16-14	S-101-13	217	--
SC-1/2-8	S-101-46	218-S	--
SC-1/2-14	S-101-14	218	--
SC-9/16-14	S-101-15	219	A-9/16
SC-5/8	S-101-17	220	A-5/8
SC-11/16	S-101-18	221	--
SC-1/2-8	S-101-49	138-L	--
SC-3/4	S-101-19	222	--
SC-13/16	S-101-20	223	--
SC-7/8	S-101-21	201	--
SC-15/16	S-101-22	--	--
SC-138	S-101-24	138	--
SC-1	S-101-25	138-2	--
SC-1-1/16	S-101-26	448	--
SC-224	S-101-27	224	--
SC-1-1/4	S-101-29	289	--
SC-1-5/16	S-101-30	1783	--
SC-1-3/8	S-101-31	225	--
SC-1-1/2	S-101-32	290	--
SC-1-5/8	S-101-33	291	--
SC-1-3/4	S-101-35	1008-1	A-1-3/4
SC-1-7/8	S-101-36	1699	--
SC-2	S-101-37	226	--
SC-2-1/4	S-101-39	1365	A-2-1/4
SC-2-1/2	S-101-40	227	--
SC-2-5/8	S-101-41	374	--
SC-2-3/4	S-101-42	232	--
SC-3	S-101-43	387	--
SC-1528	S-101-44	1528	--
SC-4	S-101-45	1540	--
SC-289-M	S-101-50	289-M	--
SC-226-L	S-101-53	226-L	--
SC-289-L	S-101-54	289-L	--
SC-3-1/8	S-101-55	373	--
SC-1521	S-101-56	1521	--
SC-4-1/8	S-101-59	377	--
SC-219-S	S-101-60	219-S	

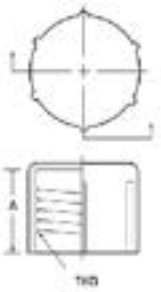

CD SERIES CAPLUG #	NIAGARA #	ALLIANCE #	NAS #
CD-3	TC-1	G-1	NAS814-3B
CD-4	TC-2	G-2	NAS814-4B
CD-41	--	G-6	--
CD-5	TC-4	G-5	NAS814-5B
CD-6	TC-5	G-8	NAS814-6B
CD-6A	TC-6	G-23	NAS814-6A
CD-67	TC-7	--	--
CD-8	TC-8	G-14	NAS814-8B
CD-TC-9	TC-9	G-16	--
CD-10	TC-10	G-17	NAS814-10B
CD-11	TC-12	G-21	--
CD-12	TC-13	G-22	NAS814-12B
CD-TC-14	TC-14	G-25	NAS814-14B
CD-TC-15	TC-15	G-24	NAS814-15B
CD-TC-18	TC-18	G-27A	NAS814-16B
CD-18	--	G-27	NAS814-18B
CD-TC-19	TC-19	--	NAS814-19B
CD-TC-20	TC-20	G-30	NAS814-20B
CD-TC-21	TC-21	--	NAS814-24B
CD-TC-6	TC-62	--	--
CD-TC-63	TC-63	--	--
CD-TC-82	TC-82	--	--
CD-TC-120	--	--	--

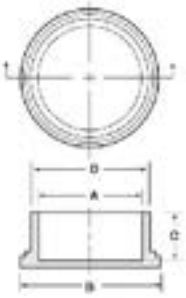

EC SERIES CAPLUG #	NIAGARA #	ALLIANCE #	NAS #
EC-4	--	D-1/4	NAS813-4A
EC-8	C-2	D-1/2	NAS813-8
EC-9	C-9	D-9/16	NAS813-9
EC-10	C-6	D-5/8	NAS813-10
EC-12	C-8	D-3/4	NAS813-12
EC-14	C-10	D-7/8	NAS813-14
EC-16	C-12	D-1	NAS813-16
EC-18	C-14	D-1 1/8	NAS813-18
EC-19	C-16	D-1 3/16	NAS813-19
EC-20	C-18	D-1 1/4	NAS813-20
EC-22	C-20	D-1 3/8	NAS813-22
EC-23	C-22	D-1 7/16	NAS813-23
EC-24	C-24	D-1 1/2	NAS813-24
EC-26	--	D-1 5/8	NAS813-26
EC-28	C-26	D-1 3/4	NAS813-28
EC-32	C-32	D-2	NAS813-32
EC-36	C-30	D-2 1/4	NAS813-36
EC-64	C-38	D-4	NAS813-64

253-848-9349
SpencerAircraft.com

Spencer Aircraft provides the information in this catalog for its customers as a ***reference only*** and it is not intended for design or guarantee of accuracy. Though it is our policy to ship all orders in a timely manner, Spencer Aircraft cannot guarantee that all items will be in stock at all times.

PLASTIC CAPS & PLUGS

COMPARISON CHART

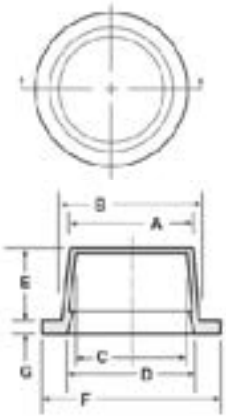

WW SERIES CAPLUG #	NIAGARA #	ALLIANCE #
WW-0	WF-2	LF-2
WW-1	WF-3	LF-3
WW-3	WF-6	LF-6
WW-3X	WF-7	LF-7
WW-4	WF-8	LF-8
WW-4X	WF-9	LF-9
WW-5	WF-10	LF-10
WW-6X	WF-11-2	LF-11X
WW-7	WF-12	LF-12
WW-7X	WF-13	LF-12X
WW-9	WF-16	LF-15
WW-9X	WF-17	LF-15X
WW-10	WF-18	LF-16
WW-11	WF-19	LF-17
WW-12	WF-21	LF-18
WW-13	WF-23	LF-20
WW-15	WF-26	LF-22
WW-16	WF-27-2	LF-23X
WW-17	WF-28	LF-24
WW-19	WF-30	LF-28

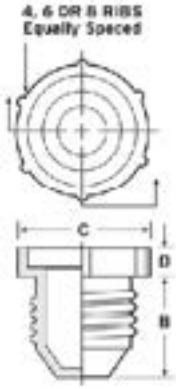

PD SERIES CAPLUG #	NIAGARA #	ALLIANCE #	NAS #
PD-20	HF-3	T-1	NAS815-2A
PD-30	HF-4	T-2	NAS815-3A
PD-40	HF-6	T-3	NAS815-4A
PD-50	HF-8	T-4	NAS815-5A
PD-60	HF-10	T-5	NAS815-6A
PD-65	HF-11	T-6	NAS815-6SAE
PD-80	HF-12	T-7	NAS815-8A
PD-100	HF-14	T-8	NAS815-10A
PD-120	HF-16	T-9	NAS815-12A
PD-121	HF-17	T-10	--
PD-160	HF-20	T-12	NAS815-16A
PD-180	HF-22	--	--
PD-HF-18	PD-120	--	NAS815-14A
PD-HF-24	PD-200	--	NAS815-20A
PD-240	HF-28	--	NAS815-24A
PD-HF-30	PD-280	--	NAS815-28A
PD-HF-32	PD-320	--	NAS815-32A

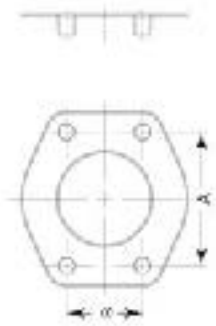

BFP SERIES CAPLUG #	NIAGARA #	ALLIANCE #
BFP-3/8	659-1	S-3/8
BFP-1/2	411-1	S-1/2
BFP-5/8	430	S-5/8
BFP-3/4	412-1	S-3/4
BFP-7/8	438-1	S-7/8
BFP-1	413-1	S-1
BFP-1-1/4	414-2	SR-1/1/4
BFP-1-1/2	--	--
BFP-1-3/4	416-1	S-1-3/4
BFP-2	--	--
BFP-2-1/2	--	--

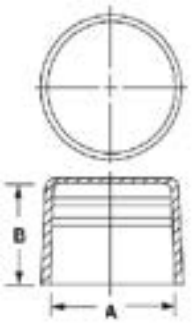

CE SERIES CAPLUG #	OLD SPENCER #	CE SERIES CAPLUG #	OLD SPENCER #
CE-310	RRC-3/8	CE-321	RRC-5
CE-311	RRC-1/2	CE-322	RRC-6
CE-312	RRC-3/4	CE-324	RRC-8
CE-313	RRC-1	CE-325	RRC-10
CE-314	RRC-1-1/4	CE-326	RRC-12
CE-315	RRC-1-1/2	CE-14	RRC-14
CE-316	RRC-2	CE-16	RRC-16
CE-317	RRC-2-1/2	CE-18	RRC-18
CE-318	RRC-3	CE-20	RRC-20
CE-319	RRC-3-1/2	CE-24	RRC-20
CE-320	RRC-4	CE-36	RRC-36

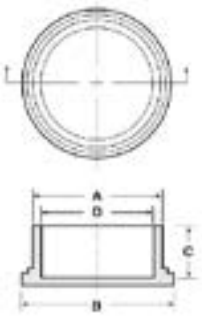

EP SERIES CAPLUG #	NIAGARA #	ALLIANCE #
EP-8	H-1/2	E-2
EP-10	H-5/8	E-6
EP-12	H-3/4	E-10
EP-14	H-7/8	E-12
EP-16	H-1	E-14
EP-18	H-1 1/8	E-16
EP-20	H-1 1/4	E-18
EP-22	H-1 3/8	E-20
EP-24	H-1 1/2	E-22
EP-28	H-1 3/4	E-24



SF SERIES CAPLUG #	OLD SPENCER #	NIAGARA #	ALLIANCE #
SF-8	395-0	CC-8	Q-1
SF-10	--	CC-10	Q-2
SF-12	395-1	CC-12	Q-3
SF-16	395-2	CC-16	Q-4
SF-20	395-3	CC-20	Q-5
SF-24	395-4	CC-24	Q-6
SF-32	395-5	CC-24	Q-7
SF-40	395-6	CC-40	Q-8

Spencer Aircraft provides the information in this catalog for its customers as a ***reference only*** and it is not intended for design or guarantee of accuracy. Though it is our policy to ship all orders in a timely manner, Spencer Aircraft cannot guarantee that all items will be in stock at all times.

PLASTIC CAPS & PLUGS

TPN SERIES (TP SERIES)

Threaded Pipe Plug

Niagara #	Caplug #	NPT
TP-1	TPN-1	1/8
TP-3	TPN-3	1/4
TP-5	TPN-5	3/8
TP-7	TPN-7	1/2
TP-9	TPN-9	3/4
TP-11	TPN-11	1
TP-13	TPN-13	1-1/4
TP-15	TPN-15	1-1/2

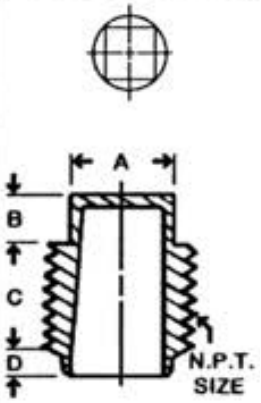

SC SERIES (S-101)

Niagara #	Caplug #	Tube Size
211 - B	SC-1/8	1/8
213 - D		3/16
214 - E	SC-1/4-14	1/4
215 - F	SC-5/16	5/16
216 - H	SC-3/8	3/8
217	SC-7/16-14	7/16
218	SC-1/2-14	1/2
219	SC-9/16-14	9/16
220	SC-5/8	5/8
221	SC-11/16	11/16
222	SC-3/4	3/4
223	SC-13/16	13/16
201	SC-7/8	7/8
138	SC-1	1
448	SC-1-1/16	1-1/16
224	SC-224	1-1/8
224-1	SC-1-3/16	1-3/16
289	SC-1-1/4	1-1/4
1783	SC-1-5/16	1-5/16
225	SC-1-3/8	1-3/8
290	SC-1-1/2	1-1/2
291	SC-1-5/8	1-5/8
1008-1	SC-1-3/4	1-3/4
1699	SC-1-7/8	1-7/8
226	SC-2	2
327	SC-2-1/8	2-1/8
1365	SC-2-1/4	2-1/4
227	SC-2-1/2	2-1/2
374	SC-2-5/8	2-5/8



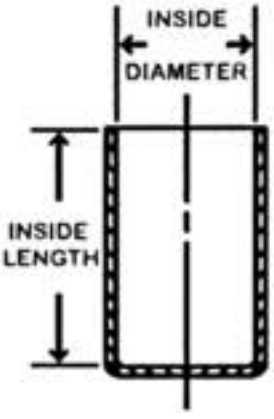

CD SERIES (TC)

Threaded Caps

Niagara #	Caplug #	Threaded Size
TC-1	CD-3	3/8-24
TC-2	CD-4	7/16-20
TC-4	CD-5	1/2-20
TC-5	CD-6	9/16-18
TC-6	CD-6A	5/8-18
TC-8	CD-8	3/4-16
TC-10	CD-10	7/8-14
TC-13	CD-12	1-1/16-12
TC-16	CD-14	1-3/16-12
TC-18	CD-TC-18	1-5/16-12
TC-20	CD-TC-20	1-5/8-12
TC-21	CD-TC-21	1-7/8-12



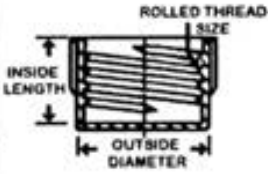

EC SERIES (C)

Electrical Connector Caps

Niagara #	Caplug #	Thread Size
C-2	EC-8	1/2
C-6	EC-10	5/8
C-8	EC-12	3/4
C-10	EC-14	7/8
C-12	EC-16	1
C-14	EC-18	1-1/8
C-16	EC-19	1-3/16
C-18	EC-20	1-1/4
C-20	EC-22	1-3/8
C-22	EC-23	1-7/16
C-24	EC-24	1-1/2
C-26	EC-28	1-3/4
C-28	EC-32	2
C-30	EC-36	2-1/4



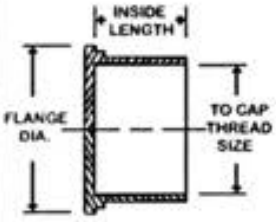

PD SERIES (HF)

Threaded Plug for Flared Female Fitting

Niagara #	Caplug #	Thread Size
HF-3	PD-20	1/8
HF-4	PD-30	3/16
HF-6	PD-40	1/4
HF-8	PD-50	5/16
HF-10	PD-60	3/8
HF-11	PD-65	3/8
HF-12	PD-80	1/2
HF-14	PD-100	5/8
HF-16	PD-120	3/4
HF-18	PD-HF-18	7/8
HF-20	PD-160	1
PD-200	PD-HF-24	1-1/4
HF-28	PD-240	1-1/2
PD-280	PD-HF-30	1-3/4
PD-320	PD-HF-32	2

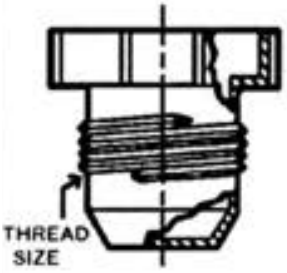

Spencer Aircraft provides the information in this catalog for its customers as a ***reference only*** and it is not intended for design or guarantee of accuracy. Though it is our policy to ship all orders in a timely manner, Spencer Aircraft cannot guarantee that all items will be in stock at all times.

Met-L-Chek Visible & Fluorescent Penetrants

A full line of penetrants to fit your inspection needs. Detect cracks flaws and leaks including hard to find detects. All Met-L-check penetrants conform to the requirements conform to the requirements of mil-i-25135 and MIL Standard 271. Special formula material meets NAVSHIPS 250-1500, ASME Boiler Code and RDT. Certification and analysis available on request. Classification information is listed below



Cleaners & Removers:

#300FL

Aqueous alkaline cleaner used for pre-cleaning in preparation for penetrant inspection. #300LF is approved for use on aerospace components for general degreasing and cleaning and is similarly used in non aerospace applications. In all aqueous cleaner applications the cleaner and residues must be thoroughly rinsed from the surface with clean water and the surface dried prior to penetrant application. #300LF is also used for post inspection cleaning for the removal of inspection penetrant and developer residues.

E-59

Class 2 (non-halogenated), Method C inspection penetrant remover. It is designed for use in the solvent wipe technique for penetrant inspection in general metalworking, welding, nuclear and automotive applications. It is a slow dry rate material and is ideal for penetrant wipe removal. E-59 is not used as a pre-inspection surface cleaner. As a penetrant remover it is sprayed onto wiping media and then the penetrant wiped from the surface. The remover should not be sprayed directly on to the test surface to remove the excess penetrant as the sensitivity will be impaired.

E-59A

Class 2 (non-halogenated), Method C inspection penetrant remover. It is designed for use in the solvent wipe technique for penetrant inspection in general metalworking, welding, nuclear and automotive applications. It is a moderate dry rate material and is ideal for penetrant wipe removal and pre-inspection surface cleaning. As a pre-cleaner it is sprayed directly on the test surface. As a penetrant remover it is sprayed onto wiping media and then the penetrant wiped from the surface.The remover should not be sprayed directly on to the test surface to remove the excess penetrant as the sensitivity will be impaired.

R-502

Special application high temperature inspection penetrant remover used as a Method C remover. It is used with high temperature visible penetrant VP-302. The use range is 51.6 ˚C – 176.6 ˚C (125˚F -350˚F). R-502 is applied to a cloth and used to wipe remove the penetrant from the inspection surface. On smooth surfaces the penetrant may wipe off readily, but on rougher surfaces the use of the remover helps to reduce the background color. This makes the actual flaw indications easier to see.

R-503

Class 2 (non-halogenated), Method C inspection penetrant remover. It is designed for use in the solvent wipe technique for penetrant inspection in general metalworking, welding, nuclear and aerospace applications. It is a moderate dry rate material and is ideal for penetrant wipe removal and pre-inspection surface cleaning. As a pre-cleaner it is sprayed directly on the test surface. As a penetrant remover it is sprayed onto wiping media and then the penetrant wiped from the surface. The remover should not be sprayed directly on to the test surface to remove the excess penetrant as the sensitivity will be impaired.

R-504

Class 2 (non-halogenated), Method C inspection penetrant remover. It is designed for use in the solvent wipe technique for penetrant inspection in general metalworking, welding, nuclear and aerospace applications. It is a flash dry rate material and as such is ideal for penetrant wipe removal, especially for the verification of indications. A cotton swab is moistened with R-504 and suspected indications are lightly wiped from the surface. The inspector can evaluate the indication by the rate of penetrant bleed back. The rapid drying of R-504 is ideal for this application as it does not blur the indication. The aerosol comes with a spray tube that facilitates pin point application which is ideal for cleaning the star indications on TAM panels. As a pre-cleaner it is sprayed directly on the test surface. As a penetrant remover it is sprayed onto wiping media and then the penetrant wiped from the surface. The remover should not be sprayed directly on to the test surface to remove the excess penetrant as the sensitivity will be impaired.

Spencer Aircraft provides the information in this catalog for its customers as a ***reference only*** and it is not intended for design or guarantee of accuracy. Though it is our policy to ship all orders in a timely manner, Spencer Aircraft cannot guarantee that all items will be in stock at all times.

Met-L-Chek Visible & Fluorescent Penetrants

A full line of penetrants to fit your inspection needs. Detect cracks flaws and leaks including hard to find detects. All Met-L-check penetrants conform to the requirements conform to the requirements of mil-i-25135 and MIL Standard 271. Special formula material meets NAVSHIPS 250-1500, ASME Boiler Code and RDT. Certification and analysis available on request. Classification information is listed below







Emulsifiers:

E-50

Method B (lipophilic) inspection penetrant emulsifier used with VP-31A red visible (Type 2) penetrant. It is designed to be sprayed onto the post emulsifiable penetrant to render the penetrant water washable. It is a fast acting emulsifier so very short contact time with the penetrant is required. Some users apply the emulsifier by brush and flow on techniques but these methods are not as efficient as spray. E-50 emulsifier is ideal for use on rough castings and other metal surfaces which tend to retain penetrant readily, which causes high background and difficulty in evaluating indications.

E-57

Method B (lipophilic) inspection penetrant emulsifier approved to AMS-2644 for use with FP- 94, FP-93A(M), FP-95A(M), and FP-97A(M) fluorescent (Type 1) post emulsifiable penetrants. Method B emulsifiers are used either by immersion or flow on. The emulsifier is used as supplied. The penetrant covered part is immersed into the emulsifier and then removed and allowed to drain from 30 seconds to 3 minutes depending upon the part surface roughness. The emulsifier will render the PE penetrant water washable during the dwell time. This step is then followed by a wash step in the Method B process.

E-58D

Method D (hydrophilic) inspection penetrant emulsifier approved to AMS-2644 for use with FP-94,FP-93A(M),FP-95A(M), andFP-97A(M) fluorescent (Type 1) post emulsifiable penetrants. Method D emulsifiers are used either by immersion or spray on. The emulsifier is diluted with water to the desired working concentration.

Spencer Aircraft provides the information in this catalog for its customers as a ***reference only*** and it is not intended for design or guarantee of accuracy. Though it is our policy to ship all orders in a timely manner, Spencer Aircraft cannot guarantee that all items will be in stock at all times.

CHEMICALS

Dye Penetrants

Met-L-Chek Visible & Fluorescent Penetrants

A full line of penetrants to fit your inspection needs. Detect cracks flaws and leaks including hard to find detects. All Met-L-check penetrants conform to the requirements conform to the requirements of mil-i-25135 and MIL Standard 271. Special formula material meets NAVSHIPS 250-1500, ASME Boiler Code and RDT. Certification and analysis available on request. Classification information is listed below



Developers:

D-70

Required by most penetrant inspection testing specifications. The developer draws the penetrant from the flaw and creates a uniform surface on which to view the penetrant indication. D-70 is used with fluorescent penetrants as form “d” and with visible penetrants as form “e”. It is applied after the surface penetrant has been removed and the inspection surface dried. D-70 nonaqeous developer consists of absorbent powder suspended in a volatile solvent. The developer particles will settle out upon standing, requiring agitation prior to application. This type of developer is most commonly used in aerosol cans, but may also be bulk sprayed using a paint sprayer. The solvent action of this type of developer helps bring the penetrant to the surface enhancing the detectability of the finest flaws. This type of developer uses flammable solvents and should not be used in confined spaces or near open flames or sparks.

D-702

Special application high temperature inspection developer, form “f”, used with high temperature visible penetrant VP-302 to enhance detection of surface cracks and porosity on hot surfaces. The use range is 51.6 ˚C – 176.6 ˚C (125˚F -350˚F). D-702 is applied after the surface penetrant has been removed. D-702 is applied by spraying, either from a portable compressed gas spray pack or by conventional spray gun. The developer consists of absorbent powder suspended in a volatile solvent blend. The developer particles will settle out upon standing, requiring agitation prior to application. It dries quickly and produces a thin white film, which is easily removed with water after inspection. This type of developer contains flammable solvents and should not be used in confined spaces or near open flames or sparks. The use on hot surfaces does not pose a significant fire hazard.

D-72A

Used with fluorescent penetrants as form “a”. It is applied after the surface penetrant has been removed and the inspection surface dried. D-72A dry powder developer consists of light fluffy absorbent powder. The particles are very light and will float in the air and are considered a nuisance dust This form of developer is generally applied in special storm or dust chamber equipment, but may also be dusted on to parts with a feather duster, or electrostatic spray. If sprayed avoid build up of a heavy developer film. A very fine dusting is the recommended coverage. The developer film is easily removed from the part surface with water after inspection.

D-76B

Required by most penetrant inspection testing specifications. The developer draws the penetrant from the flaw and creates a uniform surface on which to view the penetrant indication. D-76B is used with fluorescent post-emulsifiable penetrants (Type 1, Methods B & D) as a form “b” developer. This form of developer is generally applied by immersion dip, flow on, or gentle airless spray, prior to the drying process. A uniform film will form during the drying.

D-78B

Required by most penetrant inspection testing specifications. The developer draws the penetrant from the flaw and creates a uniform surface on which to view the penetrant indication. D-78B is used with fluorescent penetrants (Type 1) and visible penetrants (Type 2) as a form “c” developer. This form of developer is generally applied by immersion dip, flow on, or gentle airless spray, prior to the drying process. A uniform film will form during the drying.

Spencer Aircraft provides the information in this catalog for its customers as a ***reference only*** and it is not intended for design or guarantee of accuracy. Though it is our policy to ship all orders in a timely manner, Spencer Aircraft cannot guarantee that all items will be in stock at all times.

MS28778 gaskets supersede & are interchangeable with the old AN6290 gaskets.

Example: MS28778-5 & AN6290-5 are the same gaskets

Synthetic oil resistant rubber per specification MIL-R-7362, Type I, Composition A. (Shore A65.75 Points)

MS28778

Tube Fitting Boss Gasket

Part Number	Tubing O.D.
MS28778-2	1/8
MS28778-3	3/16
MS28778-4	1/4
MS28778-5	5/16
MS28778-6	3/8
MS28778-8	1/2
MS28778-10	5/8
MS28778-12	3/4
MS28778-16	1
MS28778-20	1-1/4
MS28778-24	1-1/2

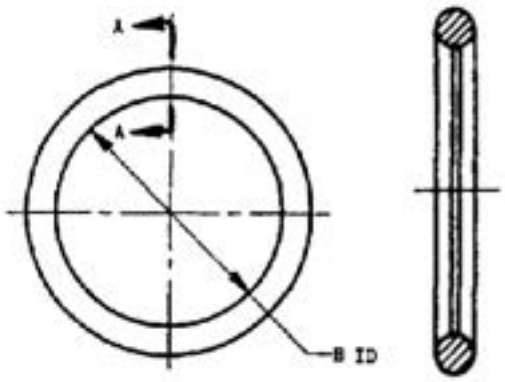

NAS617

Tube Fitting Boss Gasket

Part Number	Tubing O.D.
NAS617-2	1/8
NAS617-3	3/16
NAS617-4	1/4
NAS617-5	5/16
NAS617-6	3/8
NAS617-8	1/2
NAS617-10	5/8
NAS617-12	3/4
NAS617-16	1
NAS617-20	1-1/4
NAS617-24	1-1/2

Hydrocarbon, fuel resistant, straight thread, tube fitting, boss, O-rings for MIL-F-5572, MIL-F-5572, MIL-F-5625 fuels from -65 degree to +200 degree F. These rings are identified with non-permanent red stripe, 1/32" wide, around the outer circumference.

MS29512

Gasket

Part Number	Tubing O.D.	Thickness	Gasket I.D.
MS29512-2	1/8	.064	.239
MS29512-3	3/16	.064	.301
MS29512-4	1/4	.072	.351
MS29512-5	5/16	.075	.414
MS29512-6	3/8	.078	.468
MS29512-8	1/2	.087	.644
MS29512-10	5/8	.097	.755
MS29512-16	1	.116	1.047
MS29512-20	1-1/4	.118	1.475
MS29512-24	1-1/2	.118	1.720
MS29512-28	1-3/4	.118	2.090

MS28775

O-Rings

Part Number	I.D. in inches
MS28775-001	.025 - .033
MS28775-002	.038 - .044
MS28775-003	.052 - .060
MS28775-004	.065 - .075
MS28775-0005	.096 - .106
MS28775-006	.109 - .119
MS28775-007	.140 - .150
MS28775-008	.171 - .181
MS28775-009	.203 - .213
MS28775-010	.234 - .244
MS28775-011	.296 - .306
MS28775-012	.359 - .369
MS28775-110	.357 - .367
MS28775-111	.419 - .429
MS28775-112	.482 - .492
MS28775-113	.544 - .554
MS28775-114	.607 - .617
MS28775-115	.669 - .679
MS28775-116	.732 - .742

Spencer Aircraft provides the information in this catalog for its customers as a ***reference only*** and it is not intended for design or guarantee of accuracy. Though it is our policy to ship all orders in a timely manner, Spencer Aircraft cannot guarantee that all items will be in stock at all times.

COPPER CRUSH GASKET

MS35769

Replaces AN900 Series

Old AN900 Dash Number	MS35796 Dash Number	Tolerance +1/64, -0 A Inside Diameter	Tolerance +0, +1/64 B Outside Diameter	Tolerance + or - 1/64 C Thickness
6	6	3/8	5/8	
7	8	7/16	11/16	
8	9	1/2	3/4	
9	10	9/16	13/16	
10	11	5/8	7/8	
11	13	11/16	15/16	
12	15	3/4	1	
13	17	13/16	1-1/16	
14	18	4/8	1-1/8	
15	20	15/16	1-3/16	
16	21	1	1-1/4	
17	24	1-1/16	1-5/16	
18	26	1-1/8	1-3/8	
19	29	1-3/16	1-7/16	3/32
20	31	1-1/4	1-1/2	
21	33	1-5/16	1-9/16	
22	35	1-3/8	1-5/8	
23	38	1-7/16	1-11/16	
24	39	1-1/2	1-3/4	
25	41	1-9/16	1-13/16	
26	42	1-5/8	1-7/8	
27	46	1-11/16	1-15/16	
28	48	1-3/4	2	
29	51	1-13/16	2-1/16	
30	52	1-7/8	2-1/8	
31	54	1-15/16	2-3/16	
32	55	2	2-1/4	

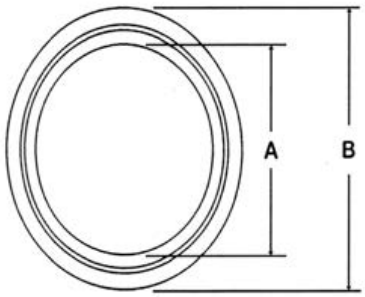

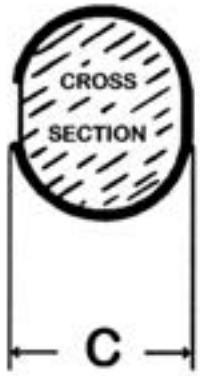

GASKET-METAL TUBE CONNECTION SEAL

AN901

Dash Number Aluminum	Dash Number Copper	Tubing OD	A Tolerance +.010, -.000 dia.	B Tolerance +.000, -.010 dia.
4A	4C	1/4	.443	.683
5A	5C	5/16	.505	.745
6A	6C	3/8	.568	.808
8A	8C	1/2	.755	.995
10A	10C	5/8	.880	1.120
12A	12C	3/4	1.068	1.370
16A	16C	1	1.318	1.620
20A	20C	1-1/4	1.630	1.870
24A	24C	1-1/2	1.880	2.120
28A	28C	1-3/4	2.255	2.495
32A	32C	2	2.505	2.745

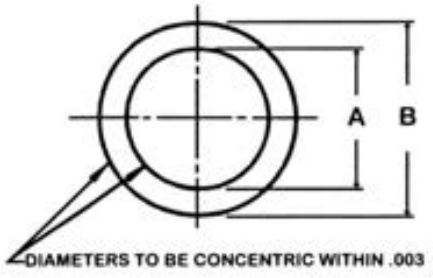

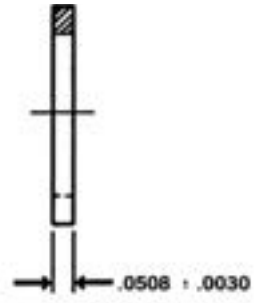

Spencer Aircraft provides the information in this catalog for its customers as a ***reference only*** and it is not intended for design or guarantee of accuracy. Though it is our policy to ship all orders in a timely manner, Spencer Aircraft cannot guarantee that all items will be in stock at all times.

SEAL



Chafe Seal TA56

An Impregnated cotton cord webbing used on engine cowls overlapping airframe. Not affected by cold, heat, or most solvents and chemicals. White
1/16”x1”

Available in 15 foot rolls.



Cowl Seal TSR-3

Red Silicone rubber engine baffle seal. No asbestos. Temperature range from -120˚ to +500˚ F.
1/8”x3”

Available in 9 foot rolls.



Cowl & Engine Baffle Seal TA-8071

First quality woven fiberglass cloth heavily impregnated with neoprene for unsurpassed durability.
Black
1/16”x3”

Available in 9 foot rolls.

SEAL & CHANNEL

NEOPRENE CHANNEL
TA-II Fairing Seal

Flexible synthetic solid rubber.
Apply with 1100-2 Pliobond
3/8” wide
1/16” wall
1/16”slot

Available by the foot or in 25 foot rolls.

TRIM AND FAIRING SEAL
TA8301 Trim Seal

Flexible synthetic solid rubber.
1/32” wall thickness
1/2” wide

Available in 25 foot rolls.

NEOPRENE CHANNEL
TA1015

For fitting windshields, windows and fairings. High grade soft, flexible, oil resisting Neoprene rubber.
1/16” wall thickness
1/4” wide
1/8” slot

Available by the foot or in 25 foot rolls.

FAIRING AND TRIM SEAL
TA799

For fitting windshields, windows and fairings. High grade soft, flexible, oil resisting Neoprene rubber.
7/32” x 3/4”

Available by the foot









253-848-9349
SpencerAircraft.com

Spencer Aircraft provides the information in this catalog for its customers as a ***reference only*** and it is not intended for design or guarantee of accuracy. Though it is our policy to ship all orders in a timely manner, Spencer Aircraft cannot guarantee that all items will be in stock at all times.

VALVE CORES



402-AH / TR C-4 / MS51377-4

USAF approved for aircraft tires.
Heat resisting core with temperature range of -65˚ F. to +350˚ F.
Operating pressure range 0 to 550 PSI.
Meets MIL-V-27317



302-DD / AN809-1

Meets MIL-C-5499 Specifications.
Operating pressure range: Dry: 70 to 2000 PSI; Oiled: 0 to 2000 PSI
Temperature range -65˚ F. to +225˚ F.
Used with 8990-C and SK-15171 strut valves.

70HT / TR C-2

Valve core used in Large bore valves.
Operating pressure range 0 to 450 PSI.
Temperature range -40˚ F. to +350˚ F.

VALVE CAPS



637 / TR VC-5 / MS20813-1

Designed for wrench tightening.
Has special sealing washer for operating pressures from 0 to 5,000 PSI.
Operating temperature -65˚ F. to +160˚ F.



HIGH PRESSURE STRUT VALVES

9019-C / MS28889-2

Used on shock struts where operating pressure is rated for 5,000 PSI.
Equipped with 637 cap.



Spencer Aircraft provides the information in this catalog for its customers as a ***reference only*** and it is not intended for design or guarantee of accuracy. Though it is our policy to ship all orders in a timely manner, Spencer Aircraft cannot guarantee that all items will be in stock at all times.

TANK VALVES

For charging and gauging pressure tanks or compressed air champers. Have 1/8” NPT male thread.
Complete with valve core and cap. Other sizes and styles also available.



SK-20420
Effective Length 3/8



02500
Effective Length 3/4



02529
Effective Length 7/16

DILL VALVE

9043



HIGH PRESSURE HOSE COUPLING

Gooseneck style coupling with 500 PSI working pressure and 10,000 PSI proof pressure. Fits standard valve threads and 1/8” NPT thread

SK-2043-C



SK-2043-S



253-848-9349
SpencerAircraft.com

Spencer Aircraft provides the information in this catalog for its customers as a ***reference only*** and it is not intended for design or guarantee of accuracy. Though it is our policy to ship all orders in a timely manner, Spencer Aircraft cannot guarantee that all items will be in stock at all times.

AT100
Straight-Type

A precision set for riveting in open areas.

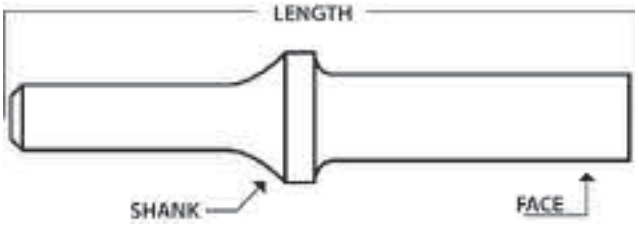

AT101
Offset-Type

A 10” bend from the cup allows added clearance when offset riveting is required.

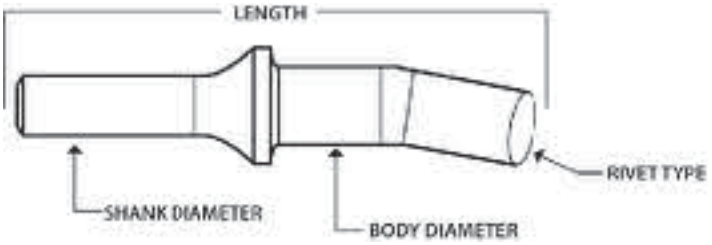

HOW TO ORDER

CUPPED SPECIFY: **Basic Part No.** **Dash Length** **Shank dia. Letter** **Rivet Size & Type**

Example: AT100A · 5 · 1/8 AN430

FLUSH SPECIFY: **Basic Part No.** **(F) Dash Length No.** **Shank dia. Letter** **Flush dia. Letter**

Example: AT100AF · 5A

(•) Standard Sizes

BASIC PART NO.	2-1/2	3-1/2	5-1/2	5-3/4	6-5/8	7-1/2	10-1/2	13-1/2	.401	.498	CUPPED	FLUSH DIA.	
DASH NO.	-2	-3	-5			-7	-8	-9	A	B		1/2(A)	5/8(B)
AT100	•	•	•			•	•	•	•	•	•	•	•
AT101	•	•	•			•	•	•	•	•	•	•	•

AT112 SERIES

FLUSH RIVET SET, MUSHROOM TYPE
This convex crowned, flush rivet set is particularly adapted to riveting thin sections without danger of denting or dishing skin surface.

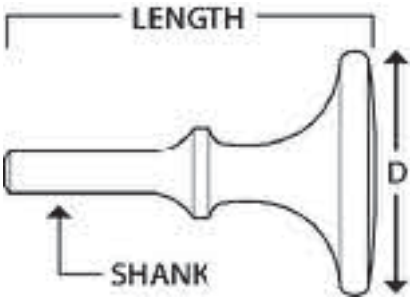

TO ORDER SPECIFY: **Basic Part No.** **Shank dia. Letter**

Example: AT112A

SHANK DIA.	.401	.498
LETTER	A	B

AT114 SERIES

QUICK CHANGE, RETAINER SPRING
Makes possible the changing of rivet sets in a rivet fun without removal of retainer spring. This safety device can be permanently installed on hammer and will accommodate all topes of rivet sets



Part No.	R			L	RIVET SET SHANK DIA.
	1/2	9/16	5/8		
AT114B-3	•	•	•	1-3/16	.498
AT114C-3	•	•	•	1-1/8	.401

AT115 SERIES

RETAINER SPRING, BEEHIVE TYPE
A fixed type retainer spring to hold rivet sets securely in a rivet gun, affording maximum safety



Part No.	R			L	RIVET SET SHANK DIA.
	1/2	9/16	5/8		
AT115B-3	•	•	•	1-3/16	.498
AT115C-3	•	•	•	1-1/8	.401

Spencer Aircraft provides the information in this catalog for its customers as a ***reference only*** and it is not intended for design or guarantee of accuracy. Though it is our policy to ship all orders in a timely manner, Spencer Aircraft cannot guarantee that all items will be in stock at all times.

"M" Series
The "M" series fasteners are the standard (button) plunger type "cleco" Plier operated, spring-loaded with a strong, durable steel plated body: designed for sheets that require precise holding of the material while other operations are completed.

M Series

Part Number	Color Code	Grip	Diameter	Drill size	Cross Reference Chart		
M-3/32	Zinc	0-1/4	3/32	#40	CLEK-LOC	KWIK-LOK	MONOGRAM
M-1/8	Copper	0-1/4	1/8	#30	C	K	M
M-5/32	Black	0-1/4	5/32	#21	CL	KL	ML
M-3/16	Brass	0-1/4	3/16	#10	CC	KK	MM
M-1/4	Copper	0-1/4	1/4	#1/4	CHD	KHD	MHD

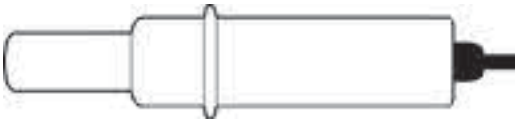

The **"MHD"**, "**MHDL**", **"ML**", & "**MEL**" series fasteners are designed for applications requiring an extended grip range. All are plier operated using the C-200 plier, spring-loaded & color by size fore easy identification. Please refer to the charts below for specifications.

MHD Series

Part Number	Color Code	Grip	Diameter	Drill size
MHD-3/32	Zinc	0-1/2	3/32	40
MHD-1/8	Copper	0-1/2	1/8	30
MHD-5/32	Black	0-1/2	5/32	21
MHD-3/16	Brass	0-1/2	3/16	10

MHDL Series

Part Number	Color Code	Grip	Diameter	Drill size
MHDL-3/32	Zinc	1/2-1	3/32	40
MHDL-1/8	Copper	1/2-1	1/8	30
MHDL-5/32	Black	1/2-1	5/32	21
MHDL-3/16	Brass	1/2-1	3/16	10

ML Series

Part Number	Color Code	Grip	Diameter	Drill size
ML-3/32	Zinc	1/4-1/2	3/32	40
ML-1/8	Copper	1/4-1/2	1/8	30
ML-5/32	Black	1/4-1/2	5/32	21
ML-3/16	Brass	1/4-1/2	3/16	10

MEL Series

Part Number	Color Code	Grip	Diameter	Drill size
MEL-3/32	Zinc	1/2-3/4	3/32	40
MEL-1/8	Copper	1/2-3/4	1/8	30
MEL-5/32	Black	1/2-3/4	5/32	21
MEL-3/16	Brass	1/2-3/4	3/16	10

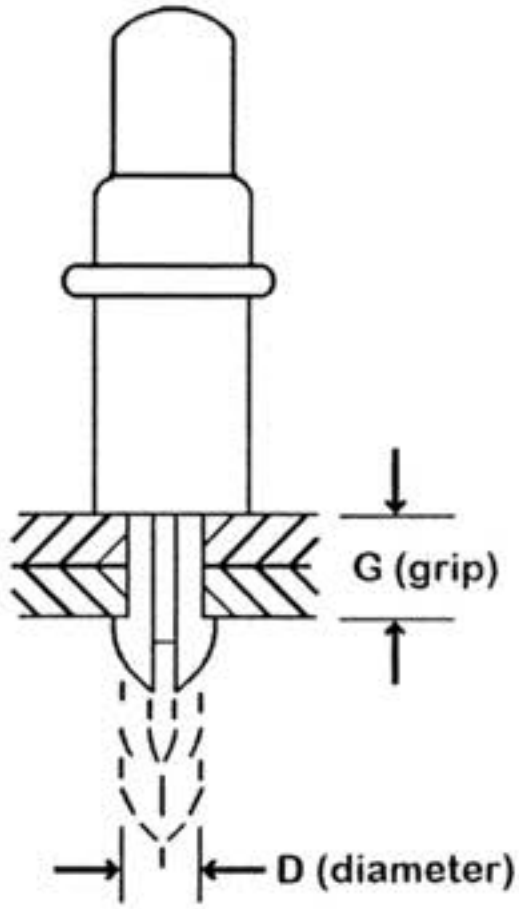

253-848-9349
SpencerAircraft.com

Spencer Aircraft provides the information in this catalog for its customers as a ***reference only*** and it is not intended for design or guarantee of accuracy. Though it is our policy to ship all orders in a timely manner, Spencer Aircraft cannot guarantee that all items will be in stock at all times.

MS35489

Grommets, Synthetic and Silicone Rubber, Hot-Oil and Coolant Resistant

Procurement Specification: MIL - G - 3036

Supersedes: MS35490 and AN931

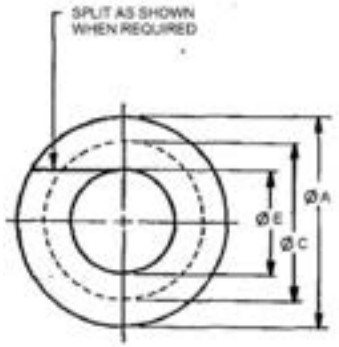

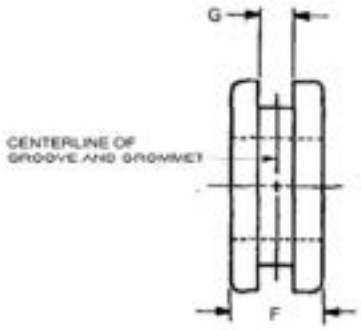

DASH NUMBERS AND DIMENSIONS

⦸ E Hole	⦸ C Groove	⦸ A Outside	GROOVE WIDTH " G " .062		.094		.125		.188		.250	
			Dash No.	" F "	Dash No.	" F "	Dash No.	" F "	Dash No.	" F "	Dash No.	" F "
.125	.188	.312	140	.188								
.125	.250	.344	1	.188	142	.218						
.125	.375	.500			143	.312						
.125	.562	.750	2	.188			31	.250	60	.312	89	.375
.125	1.000	1.250	3	.250			32	.312	61	.375	90	.439
.188	.312	.3438	4	.188	144	.250	33	.250	62	.312	91	.375
.188	.562	.750	134	.188	145	.468	137	.250	138	.312	139	.375
.188	.652	.875	5	.188			34	.250	63	.312	92	.375
.250	.438	.562			146	.219						
.250	.438	.652	6	.188			35	.250	64	.312	93	.375
.250	.750	1.000	7	.250			36	.312	65	.375	94	.438
.250	1.000	1.250	8	.250			37	.312	66	.375	95	.438
.312	.562	.812	9	.312			38	.375	67	.438	96	.500
.312	.750	1.000	10	.312			39	.375	68	.438	97	.500
.312	.812	1.062	118	.312			122	.375	136	.438	130	.500
.375	.500	.641			147	.250						
.375	.500	.656	141	.250								
.375	.625	.875	11	.312			40	.375	69	.438	98	.500
.375	1.000	1.250	12	.250	148	.281	41	.312	70	.375	99	.438
.438	.688	.938	13	.312			42	.375	71	.438	100	.500
.500	.750	1.000	149	.250	150	.281						
.500	.812	1.062	14	.312			43	.375	72	.438	101	.500
.500	1.250	1.500	15	.250			44	.312	73	.375	102	.438
.562	.182	1.062	16	.312			45	.375	74	.438	103	.500
.625	.875	1.125	17	.312	151	.344	46	.375	75	.438	104	.500
.625	.969	1.250			152	.438						
.625	1.250	1.500	18	.250			47	.312	76	.375	105	.438
.688	1.000	1.312	19	.375	153	.406	48	.438	77	.500	106	.562
.750	1.062	1.375	20	.375	154	.312	49	.438	78	.500	107	.562
.750	1.250	1.625	135	.250			123	.312	127	.375	131	.438
.750	1.438	1.812	21	.375			50	.438	79	.500	108	.562
.750	1.625	2.000	120	.375			124	.438	128	.500	132	.562
.875	1.125	1.500			155	.344						
.875	1.250	1.625	22	.438			51	.500	80	.562	109	.625
.875	1.625	2.000	121	.438			125	.500	129	.562	133	.625
1.000	1.375	1.750	23	.438	156	.375	52	.500	81	.562	110	.625
1.000	1.875	2.250	24	.438			53	.500	82	.562	111	.625
1.250	2.375	2.750	25	.438			54	.500	83	.562	112	.625
1.250	2.500	2.875	26	.438			55	.500	84	.562	113	.625
1.500	1.750	2.125	27	.438			56	.500	85	.562	114	.625
1.500	2.750	3.250	28	.438			57	.500	86	.562	115	.625
1.750	3.250	3.750	29	.500			58	.562	87	.625	116	.688
2.000	3.500	4.000	30	.500			59	.562	88	.625	117	.688

Spencer Aircraft provides the information in this catalog for its customers as a ***reference only*** and it is not intended for design or guarantee of accuracy. Though it is our policy to ship all orders in a timely manner, Spencer Aircraft cannot guarantee that all items will be in stock at all times.

AMERICAN STANDARD SCREWS

Thread Dimensions

FINE THREAD SERIES

IDENTIFICATION		BASIC DIAMETERS			TAP DRILL SIZES	
Sizes	Threads	Major	Pitch	Minor	Number	Decimal
0	80	.0600	.0519	.0438	3/64	.0469
1	72	.0730	.0640	.0550	53	.0595
2	64	.0660	.0759	.0657	50	.0700
3	56	.0990	.0874	.0758	45	.0820
4	48	.1120	.0985	.0849	42	.0935
5	44	.1250	.1102	.1955	37	.1040
6	40	.1380	.1218	.1055	33	.1130
8	36	.1640	.1460	.1279	29	.1360
10	32	.1900	.1697	.1494	21	.1590
12	28	.2160	.1928	.1696	14	.1820
1/4		.2500	.2268	.2036	3	.2130
5/16	24	.3125	.2854	.2584	1	.2720
3/8		.3750	.3479	.3209	Q	.3320
7/16	20	.4375	.4050	.3725	25/64	.3906
1/2		.5000	.4675	.4350	29/64	.4531
9/16	18	.5625	.5264	.4903	33/64	.5156
5/8		.6250	.5889	.5528	37/64	.5781
3/4	16	.7500	.7094	.6688	11/16	.6875
7/8	14	.8750	.8286	.7822	13/16	.8125
1		1.0000	.9536	.9072	15/16	.9375

COARSE THREAD SERIES

IDENTIFICATION		BASIC DIAMETERS			TAP DRILL SIZES	
Sizes	Threads	Major	Pitch	Minor	Number	Decimal
1	64	.0730	.0629	.0527	53	.0595
2	56	.0860	.0744	.0628	50	.0700
3	48	.0990	.0855	.0719	47	.0785
4	40	.1120	.0958	.0795	43	.0890
5		.1250	.1088	.0925	38	.1015
6	32	.1380	.1177	.0974	36	.1065
8		.1640	.1473	.1234	29	.1360
10	24	.1900	.1629	.1359	25	.1495
12		.2160	.1889	.1619	16	.1770
1/4	20	.2500	.2175	.1050	7	.12010
5/16	18	.3125	.2764	.2403	F	.2570
3/8	16	.3750	.3344	.2938	5/16	.3125
7/16	14	.4375	.3911	.3443	U	.3680
1/2	13	.5000	.4500	.4001	27/64	.4219
9/16	12	.4625	.5084	.4542	31/64	.4844
5/8	11	.6250	.4550	.5069	17/32	.5312
3/4	10	.7500	.5840	.6201	21/32	.6582
7/8	9	.8750	.8028	.7307	49/64	.7656
1	8	1.0000	.9188	.8376	7/8	.8750



Spencer Aircraft provides the information in this catalog for its customers as a ***reference only*** and it is not intended for design or guarantee of accuracy. Though it is our policy to ship all orders in a timely manner, Spencer Aircraft cannot guarantee that all items will be in stock at all times.

Triumph Twist Drill Bits

A wide selection on drill bits perfect for any job. These are carbon steel bits for precise cutting and long life. Most sizes available as Long (L) ,Short (S), and Stubby (St)



Drill Size	Long	Short	Stub
10	2	1-1/4	
3/16	2	1-1/4	1/2
1/4	2	1-1/4	
20	2	1-1/4	1/2
21	2	1-1/4	
30	2	1-1/4	1/2
40	2	1-1/4	1/2

Craftics Plastic Drill Bits

Perfect for drilling most types of plastics including Acrylic, Plexiglas, Lexan & Acrylite.



1/8
5/32
3/16
1/4
5/16
3/8
7/16
1/2

Male Threaded Drill Bit

Male Threaded drill bits of high speed steel 1/4 -28 thread. 1 - 1/4” long.



10
20
21
30
40

Center It V-Block Drill Press Fixture

The perfect accessory for precise drilling on tubing and other round objects. The deep V shape securely holds the object you are drilling. Also increase safety and reduces the time you’ll spend on complex round objects. Mounts securely to your drill press with four bolt holes.



Spencer Aircraft provides the information in this catalog for its customers as a ***reference only*** and it is not intended for design or guarantee of accuracy. Though it is our policy to ship all orders in a timely manner, Spencer Aircraft cannot guarantee that all items will be in stock at all times.

Strap Duplicators

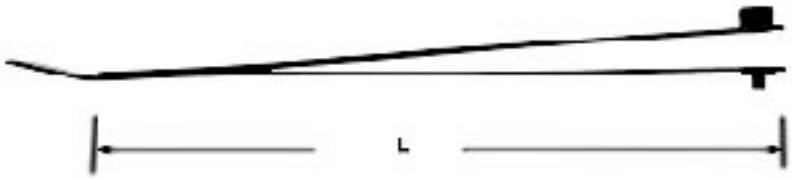

Bushing Type Strap Duplicators

AT532 / AT532C Series

Part Number	Pilot and Drill Size	Overall Length " L "
AT532-61	40	6-1/4
AT532-62	30	6-1/4
AT532-63	21	6-1/4
AT532-64	19	6-1/4
AT532-65	10	6-1/4
AT532-66	5	6-1/4
AT532-67	F	6-1/4
AT532-68	1/4	6-1/4
AT532C-61	40	13-1/4
AT532C-62	30	13-1/4
AT532C-63	21	13-1/4
AT532C-64	19	13-1/4
AT532C-65	10	13-1/4
AT532C-66	5	13-1/4
AT532C-67	F	13-1/4
AT532C-68	1/4	13-1/4

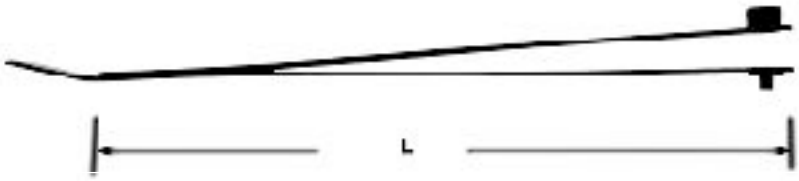

Inverted Pilot Bushing Type Strap Duplicator

AT532A / AT532D Series

Part Number	Pilot and Drill Size	Overall Length " L "
AT532A-61	40	6-1/4
AT532A-62	30	6-1/4
AT532A-63	21	6-1/4
AT532A-64	19	6-1/4
AT532A-65	10	6-1/4
AT532A-66	5	6-1/4
AT532A-67	F	6-1/4
AT532A-68	1/4	6-1/4
AT532D-61	40	13-1/4
AT532D-62	30	13-1/4
AT532D-63	21	13-1/4
AT532D-64	19	13-1/4
AT532D-65	10	13-1/4
AT532D-66	5	13-1/4
AT532D-67	F	13-1/4
AT532D-68	1/4	13-1/4

253-848-9349
SpencerAircraft.com

Spencer Aircraft provides the information in this catalog for its customers as a ***reference only*** and it is not intended for design or guarantee of accuracy. Though it is our policy to ship all orders in a timely manner, Spencer Aircraft cannot guarantee that all items will be in stock at all times.

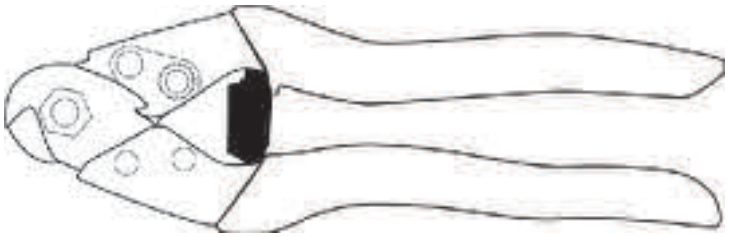

CABLE and WIRE CUTTERS
C-7

Fast, easy, and clean cutting. Triangular cut leaves no loose strands of aircraft cable. Cut 1/4", mild steel, 3/16" high tensile steel strand cable. 3/32" hard drawn and 3/16" mild steel wire. 7-1/2" long. Weight: 9 ounces.

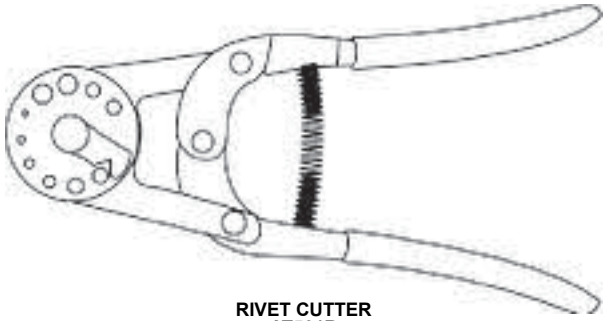

RIVET CUTTER
AT501R

Designed Quickly and easily to cut all AN426, AN430, AN442, AN456, and AN470 aluminum rivets from 1/16" to 1/4" diameter. It is adjustable for 1/4" length to 3/4" length rivets in increments of 1/16". This complete interchange in one tool, by simply adjustment of the spacers, saves valuable production time and reduces inventory costs.



DRILL STOPS

AT570 SERIES

Primarily designed to control hole depth, this tool will also cushion the break-through of a drill and prevent chuck jaws from coming in contact with the skin surface. Unit locks on drill with a set screw.

Part Number	Drill Size
AT570-50	50
AT570-40	40
AT570-30	30
AT570-28	28
AT570-21	21
AT570-20	20
AT570-12	12
AT570-11	11
AT570-10	10
AT570-1/4	1/4
AT570-5/16	5/16

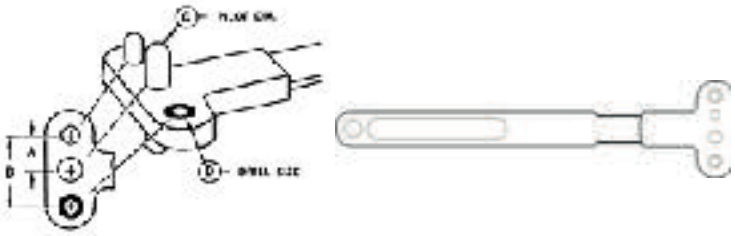

Plate Nut Drill Jigs

Screw Size	Spacing (A)	Spacing (B)	Pilot dia. (C)	Drill Size (D)
6	.344	.688	.688	40
8	.344	.688	.688	40
10	.344	.688	.688	40
1/4	.500	1.000	1.000	40

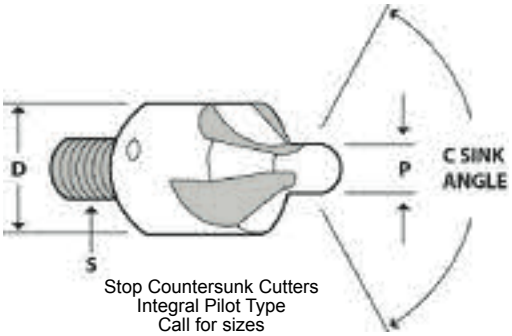

Stop Countersunk Cutters
Integral Pilot Type
Call for sizes

PREVAL Spray Gun





Part Number	Item Description
267	6oz Bottle Kit
465	Power Unit
466	Glass Jar ONLY
469	Glass Jar and Cap
3000-1	Plastic Caps for 466

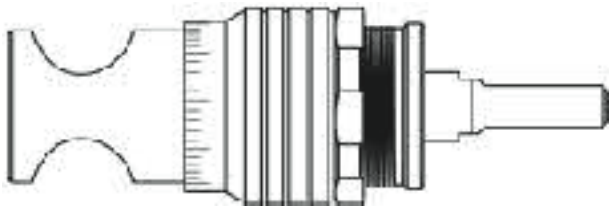

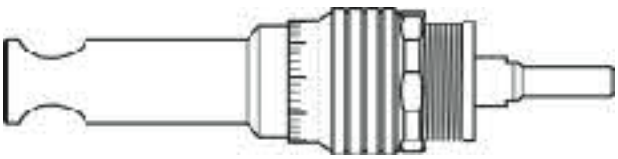

Countersink Units
Call for sizes

Spencer Aircraft provides the information in this catalog for its customers as a ***reference only*** and it is not intended for design or guarantee of accuracy. Though it is our policy to ship all orders in a timely manner, Spencer Aircraft cannot guarantee that all items will be in stock at all times.

AeroLEDs Aircraft Lighting by Series Reference Chart				
Series	**Light Type**	**P/N**	**Voltage**	**Approval**
AeroSun	Landing/Taxi/Recognition/with Pulse	01-2120	9-36V	EXP
Aerosun Vx	Landing /Taxi/Recognition/Left and Right	01-2500 (Pair)	9-36V	EXP
MicroSun	Landing/Taxi/Recognition	01-1170	9-36V	EXP
MicroSun	Landing/Taxi/Recognition	01-1170-A	9-36V	EXP
Pulsar	Nav/Position/Strobe/12V/Red and Green	11-1100-12	14V	TSO
Pulsar	Nav/Position/Strobe/24V/Red and Green	11-1100-24	28V	TSO
Pulsar N	Nav/Left/12V/Red and Green	11-1280-A-12-L	14V	TSO
Pulsar N	Nav/Right/12V/Red and Green	11-1280-A-12-R	14V	TSO
Pulsar N	Nav/Left/24V/Red and Green	11-1280-A-24-L	28V	TSO
Pulsar N	Nav/Right/24V/Red and Green	11-1280-A-24-R	28V	TSO
Pulsar NS	Nav/Strobe/12V/Left/Red and Green	11-1280-B-12-L	14V	TSO
Pulsar NS	Nav/Strobe/12V/Right/Red and Green	11-1280-B-12-R	14V	TSO
Pulsar NS	Nav/Strobe/Left/24V/Red and Green	11-1280-B-24-L	28V	TSO
Pulsar NS	Nav/Strobe/Right/24V/Red and Green	11-1280-B-24-R	28V	TSO
Pulsar NS	Nav/Strobe/12V/Left/Red and Green	01-1280-B-12-L	14V	EXP
Pulsar NS	Nav/Strobe/12V/Right/Red and Green	01-1280-B-12-R	14V	EXP
Pulsar NS	Nav/Strobe/24V/Left/Red and Green	01-1280-B-24-L	28V	EXP
Pulsar NS	Nav/Strobe/24V/Right/Red and Green	01-1280-B-24-R	28V	EXP
Pulsar NSP	Nav/Position/Strobe/12V/Right/Red and Green	01-1280-C-12-L	14V	EXP
Pulsar NSP	Nav/Position/Strobe/12V/Right/Red and Green	01-1280-C-12-R	14V	EXP
Pulsar NSP	Nav/Position/Strobe/24V/Right/Red and Green	01-1280-C-24-L	28V	EXP
Pulsar NSP	Nav/Position/Strobe/24V/Right/Red and Green	01-1280-C-24-R	28V	EXP
Pulsar NSP	Nav/Strobe/Position/Left/12V/Red and Green	11-1280-C-12-L	14V	TSO
Pulsar NSP	Nav/Strobe/Position/Right/12V/Red and Green	11-1280-C-12-R	14V	TSO
Pulsar NSP	Nav/Strobe/Position/Left/24/Red and Green	11-1280-C-24-L	28V	TSO
Pulsar NSP	Nav/Strobe/Position/Right/24V/Red and Green	11-1280-C-24-R	28V	TSO
SunBeacon II	Beacon/Red/12V	11-2200-A-12	14V	TSO
SunBeacon II	Beacon/Red/24V	11-2200-A-24	28V	TSO
SunBeacon II	Beacon/White/12V	11-2200-B-12	14V	TSO
SunBeacon II	Beacon/White/24V	11-2200-B-24	28V	TSO
SunBeam	Landing/Taxi/Recognition	90-1000	9-36V	FAA-PMA
SunRay Plus	Landing w/Recognition	01-1150	9-36V	EXP
SunSpot 36-4313	Landing	01-1030-4313	14V	FAA-PMA
SunSpot 36-4313	Landing w/Pulse	01-1030-4313-H	14V	FAA-PMA
SunSpot 36-4314	Taxi	01-1030-4314	14V	FAA-PMA
SunSpot 36-4314	Taxi w/Pulse	01-1030-4314-H	14V	FAA-PMA
SunSpot 36-4587	Taxi	01-1030-4587	28V	FAA-PMA
SunSpot 36-4587	Taxi w/Pulse	01-1030-4587-H	28V	FAA-PMA
SunSpot 36-4596	Landing	01-1030-4596	28V	FAA-PMA
SunSpot 36-4596	Landing w/Pulse	01-1030-4596-H	28V	FAA-PMA
SunSpot 36HX	Taxi w/Recognition	01-1030-H-B	9-36V	FAA-PMA
SunSpot 36HX	Landing w/Recognition	01-1030-H-A	9-36V	FAA-PMA
SunSpot 36LX	Taxi	01-1030-L-B	9-36V	FAA-PMA
SunSpot 36LX	Landing	01-1030-L-A	9-36V	FAA-PMA
SunSpot 46-4522HX	Landing w/Recognition	01-2130-HX	9-36V	FAA-PMA
SunSpot 46-4522	Landing	01-2130-LX	9-36V	FAA-PMA
SunSpot 46-4554	Taxi	01-2230-4554	28V	FAA-PMA
SunSpot 46-4554HX	Taxi w/Pulse	01-2230-4554-H	28V	FAA-PMA
SunSpot 46-4580	Landing	01-2230-4580	28V	FAA-PMA
SunSpot 46-4580HX	Landing w/Pulse	01-2230-4580-H	28V	FAA-PMA
SunSpot 64	Landing	01-2150-A	9-40V	FAA-PMA
SunSpot PCx	Taxi	900-01-100-C	28V	FAA-PMA
SunSpot PCx	Landing	900-01-100-A	28V	FAA-PMA
SunTail	Position/Strobe/12V	01-1260-12	14V	EXP
SunTail	Position/Strobe/24V	01-1260-24	28V	EXP
SunTail	Position/Strobe/12V	11-1260-12	14V	TSO
SunTail	Position/Strobe/24V	11-1260-24	28V	TSO

Spencer Aircraft provides the information in this catalog for its customers as a ***reference only*** and it is not intended for design or guarantee of accuracy. Though it is our policy to ship all orders in a timely manner, Spencer Aircraft cannot guarantee that all items will be in stock at all times.





	Landing Lights											
	36HX Landing with Pulse P/N 01-1030-H-A (PAR36)	36LX Landing P/N 01-1030-L-A (PAR36)	36-4596 Landing P/N 01-1030-4596 (PAR36)	48HX Landing with Pulse P/N 01-2130-HX (PAR46)	46HX Landing or Taxi P/N 01-2130-LX (PAR46)	64-4559 Landing pending Approval (PAR64)	46-4580 Landing P/N 01-2230-4580 (PAR46)	SunBeam P/N 90-1000	36-4313 Landing P/N 01-1030-4313 (PAR36)	36-4313HX Landing with Pulse P/N 01-1030-4313-H (PAR36)	36-4596HX Landing with Pulse P/N 01-1030-4596H (PAR36)	46-4580-HC Landing with Pulse P/N 01-2230-4580-H (PAR46)
Aerostar												
PA-60-600 (600), PA-60-601 (601), PA-60-601P (601P), PA-60-602P (602P), PA-60-700P (700P)	•	•	•						•	•	•	•
Aviat												
A-1, A-1A, A-1B, A-1C-180, A-1C-200	•											
AT-400, AT-400A, AT-402, AT-402A,B, AT-502, AT-502B, AT-503				•				•				
Boeing												
DC3C-SC3G, DC3C-S1C3G, DC3C-S4C4G, DC3C-R-1830-90C						•						
Beechcraft (Textron)												
19A, B19, M19A, 23, A23, A23A, A23-24, B23, C23, A24, A24R, B24R, C24R	•	•	•	•	•		•		•	•	•	•
A23-19	•	•	•	•	•		•					
35-33, 35-A33, B33, C33, C33A, E33, E33A, E33C, F33, F33A, F33C, G33, 35, 35R, A35, B35, C35, D35, E35, F35, G35, H35, J35, K35, M35, N35, P35, S35, V35, V35A,B, 36, A36, A36TC, B36TC, G36	•	•	•	•	•		•		•	•	•	•
50, D50E-5990, 58PA, 58TCA	•	•	•	•	•		•					
850, C50, D50, D50A,B,C,D,E, E50, F50, G50, H50, J50, 95, 95-55, 95-A55, 95-B55, 95-B55A, B55B, C55, C55A, D55, D55A, E55, E55A, 56TC, A56TC, G56, 58, 58A, 58P, 58TC	•	•	•	•	•		•		•	•	•	•
60, A60, B60, 65, A65, A-65-8200, 65-80, 65-A80, 65-A80-8800, 65-B80, 65-88, 65-90, 65-A90, 70, 76, 77, C90, C90A, C90GT, 65-A90-1,2,3,4, B90, E90, H90, B95, B95A, D95A, E95, 99, 99A, A99, A99A, B99, C99, 100, B100	•	•	•	•	•		•		•	•	•	•
A100-1, A100, A100A, A100C	•	•	•	•	•		•					
200, 200C, 200CT, 200T, A200, A200C, A200CT, B200, B200C, B200CGT, B200CT, B200GT, B200T, 300, 300LW, B300, B300C, 1900, 1900C,D	•	•	•	•	•		•		•	•	•	•
Cessna (Textron)												
120, 140, 140A	•	•										
150, 150A,B,C,D,E,F,G,H,J,K,L,M, A150K,L,M, 152, A152	•	•	•	•	•		•					
170, 170A,B, 172, 172A,B,C,D,E,F,G,H,I,K,L,M,N,P,Q,R,S, P172D, R172E,F,G,H,J,K, 172RG, 175, 175A,B,C, 177, 177A,B, 177RG	•	•	•	•	•		•					
180, 180A,B,C,D,E,F,G,H,J,K, 182, 182A,B,C,D,E,F,G,H,J,K,L,M,N,P,Q,R,S,T, R182, T182, TR182,T182T	•	•	•	•	•		•					
185, 185A,B,C,D,E, A185E,F, 188, 188A,B, A188, A188A,B, T188C, 190, 195, 195A,B, 210-5, (205), 210-5A, (205A)	•	•	•	•	•		•					
206, 206H, U206, U206A,B,C,D,E,F,G, P206, P206A,B,C,D,E, TU206A,B,C,D,E,F,G, T206H, TP206A,B,C,D,E	•	•	•	•	•		•					
207, 207A, T207, T207A, 208, 208B	•	•	•	•	•		•					
210, 210A,B,C,D,E,F,G,H,J,K,L,L,M, P210N,R, T210F,G,H,J,K,L,M,N,R	•	•	•	•	•		•					
310, 310A,B,C,D,E,F,G,H,I,J,JI,K,L,N,P,Q,R, E310H, T310P,Q,R, 320A,B,C,D,E,F, 335, 320, 320-, 336, 337, 337A,B,C,D,E,F,G,H, F337E,F,G,H, FT337J,F,GP,HP M337B, 337D,E,F,G,H,H-SP	•	•	•	•	•		•		•	•	•	•
P337H, T337B,C, 340, 340A	•	•	•	•	•		•					
401, 401A,B, 402, 402A,B,C, 404, 406, 411, 411A, 414, 414A, 421, 421A,B,C, 425, 441	•	•	•	•	•		•		•	•	•	•
Commander												
112, 112B, 112TC, 112TCA, 114, 114A,B, 500, 500A,B,S,U, 520, 560, 560-A,E,F, 680, 680E,F,FL,T,V,W, 681, 685, 690, 690A,B,C,D, 695, 695A,B	•	•	•						•	•	•	•
114TC, 720	•	•	•									
Gruman (True Flight Holdings)												
AA-1, AA-1A,1B,1C, AA-5, AA-5A,B, AG-5B	•	•	•						•	•	•	•
Maule												
M-4, M-4S,T, M-4-180C,S,T, M-4-210, M-4-210C,S, M-5-180C, M-5-200, M-5-210C, M-5-210TC, M-5-220C	•	•							•	•	•	•
M-4C,M-4-210T, M-4-220, M-4-220C,S,T	•	•										
M-5-235C, M-6-180, M-6-235, M-7-235, M-7-235A,B,C, M-7-260, M-7-260C, M-7-420AC, MT-7-235, MT-7-260, MT-7-420, MX-7-160, MX-7-180, MX-7-235, MX-7-235A,B,C, MX-7-420, MXT-7-180, MXT-7-160, MX-7-180A,B,C, MXT-7-180A, M-8-235	•	•							•	•	•	•
M-7-420A, MS-7-180AC, MX-7-160C	•	•										
Mooney												
M20, M20A,B,C,D,E,F,G,J,K,L,M,R,S, M20TN, M22	•	•							•	•	•	•
Piper												
J3C-40, J3C-50, J3C-50S, J3C-65, J3C-65S, J3F-50, J3F-50S, J3F-60, J3F-60S, J3F-65, J3F-65S, J3L, J3L-S, J3L-65, J3L-65S, J4, J4A, J4A-S, J4E, PA-11, PA-11S, PA-15, PA-16, PA-16S, PA-17	•	•	•									
PA-18, PA-18 "105", PA-18 "125", PA-18 "135", PA-18 "150", PA-18A, PA-18A "135", PA-15A "150"	•	•	•									
PA-18AS "125", PA-18AS "135", PA-18AS "150", PA-18S, PA-18S "105", PA-18S "125", PA-18S "135"	•	•	•									
PA-18S "150", PA-19, PA-19S, PA-20, PA-20 "115", PA-20 "135", PA-20S, PA-20S "115", PA-20S "135"	•	•	•									
PA-22, PA-22-108,135,150,160, PA-22S-135,150,160, PA-23, PA-23-160,235,250, PA-E21-250, PA-24, PA-24-250,260,400	•	•	•									
PA-25, PA-25-235,260	•	•	•						•	•	•	•
PA-28-140,150,151,160,161,180,181,201T,235,236, PA-28R-180,200,201,201T, PA-28RT-201,201T, PA-28S-160,180	•	•	•									
PA-30, PA-31, PA-31-300,325,350, PA-31P, PA-31P-350, PA-31T, PA-31T1,T2,T3	•	•	•									
PA-32-260,300,301, PA-32-301FT, PA-32-301T, PA-32-301XTC, PA-32R-300,301,301T, PA-32RT-300,300T, PA-32S-300	•	•	•									
PA-34-200,200T, PA-34-220T, PA-36-285, PA-36-300, PA-36-375, PA-38-112, PA-39, PA-40, PA-44-180, PA-44-180T	•	•	•									
Socata												
100S, 150T, 150ST, 235C,E, MS860B, MS885, MS892A-150,E-150, MS893A,E, MS894A,E, TB9,10,20,21, TB200	•	•	•						•	•	•	•
Viking Air Limited												
DHC-6-1,100,200,300,DHC-2 Mk.I,II,III, DHC-3	•	•	•	•	•		•					
DHC-6-400	•	•	•	•	•		•		•	•	•	•

Spencer Aircraft provides the information in this catalog for its customers as a ***reference only*** and it is not intended for design or guarantee of accuracy. Though it is our policy to ship all orders in a timely manner, Spencer Aircraft cannot guarantee that all items will be in stock at all times.

AEROLED AIRCRAFT LIGHTING





	Taxi Lights							
	36HX Taxi with Pulse P/N 01-1030-H-B (PAR36)	36 LX Taxi P/N 01-1030-L-B (PAR36)	36-4587 Taxi P/N 01-1030-4587 (PAR36)	46-4554 Taxi P/N 01-2230-4554 (PAR46)	36-4314 Taxi P/N 01-1030-4314 (PAR36)	36-4314HX Taxi with Pulse P/N 01-1030-4314-H (PAR36)	36-4587HX Taxi with Pulse P/N 01-1030-4587H (PAR36)	46-4554 Taxi with Pulse P/N 01-2230-4554-H (PAR46)
Aerostar								
PA-60-600 (600), PA-60-601 (601), PA-60-601P (601P), PA-60-602P (602P), PA-60-700P (700P)	•	•	•		•	•	•	•
Aviat								
A-1, A-1A, A-1B, A-1C-180, A-1C-200	•							
Beechcraft (Textron)								
19A, B19, M19A, 23, A23, A23A, A23-24, B23, C23, A24, A24R, B24R, C24R	•	•	•	•	•	•	•	•
A23-19, 50, D50E-5990	•	•	•	•				
35-33, 35-A33, B33, C33, C33A, E33, E33A, E33C, F33, F33A, F33C, G33, 35, 35R, A35, B35, C35, D35, E35, F35, G35, H35, J35, K35, M35, N35, P35, S35, V35, V35A,B, 36, A36, A36TC, B36TC, G36	•	•	•	•	•	•	•	•
B50, C50, D50, D50A,B,C,D,E, E50, F50, G50, H50, J50, 95, 95-55, 95-A55, 95-B55, 95-B55A, B55B, C55, C55A, D55, D55A, E55, E55A, 56TC, A56TC, G58, 58, 58A, 58P, 58TC	•	•	•	•	•	•	•	•
58PA, 58TCA, A100-1, A100, A100A, A100C	•	•	•	•				
60, A60, B60, 65, A65, A-65-8200, 65-80, 65-A80, 65-A80-8800, 65-B80, 65-88, 65-90, 65-A90, 70, 76, 77, C90, C90A, C90GT, 65-A90-1,2,3,4, B90, E90, H90, B95, B95A, D95A, F95, 99, 99A, A99, A99A, B99, C99, 100, B100	•	•	•	•	•	•	•	•
200, 200C, 200CT, 200T, A200, A200C, A200CT, B200, B200C, B200CGT, B200CT, B200GT, B200T, 300, 300LW, B300, B300C, 1900, 1900C,D	•	•	•	•	•	•	•	•
Cessna (Textron)								
120, 140, 140A	•	•						
150, 150A,B,C,D,E,F,G,H,J,K,L,M, A150K,L,M, 152, A152	•	•	•	•				
170, 170A,B, 172, 172A,B,C,D,E,F,G,H,J,K,L,M,N,P,Q,R,S, P172D, R172E,F,G,H,J,K, 172RG, 175, 175A,B,C, 177, 177A,B, 177RG	•	•	•	•				
180, 180A,B,C,D,E,F,G,H,J,K, 182, 182A,B,C,D,E,F,G,H,J,K,L,M,N,P,Q,R,S,T, R182, T182, TR182,T182T	•	•	•	•				
185, 185A,B,C,D,E, A185E,F, 188, 188A,B, A188, A188A,B, T188C, 190, 195, 195A,B, 210-5, (205), 210-5A, (205A)	•	•	•	•				
206, 206H, U206, U206A,B,C,D,E,F,G, P206, P206A,B,C,D,E, TU206A,B,C,D,E,F,G, T206H, TP206A,B,C,D,E	•	•	•	•				
207, 207A, T207, T207A, 208, 208B	•	•	•	•				
210, 210A,B,C,D,E,F,G,H,J,K,L,L,M, P210N,R, T210F,G,H,J,K,L,M,N,R	•	•	•	•				
310, 310A,B,C,D,E,F,G,H,I,J,JI,K,L,N,P,Q,R, E310H, T310P,Q,R, 320A,B,C,D,E,F, 335, 320, 320-, 336, 337, 337A,B,C,D,E,F,G,H, F337E,F,G,H, FT337E,F,GP,HP M337B, 337D,E,F,G,H,H-SP	•	•	•	•	•	•	•	•
P337H, T337B,C, 340, 340A	•	•	•	•				
401, 401A,B, 402, 402A,B,C, 404, 406, 411, 411A, 414, 414A, 421, 421A,B,C, 425, 441	•	•	•	•	•	•	•	•
Commander								
112, 112B, 112TC, 112TCA, 114, 114A,B, 500, 500A,B,S,U, 520, 560, 560-A,E,F, 680, 680E,F,FL,T,V,W, 681, 685, 690, 690A,B,C,D, 695, 695A,B	•	•	•		•	•	•	•
114TC, 720	•	•	•					
Grumman (True Flight Holdings)								
AA-1, AA-1A,1B,1C, AA-5, AA-5A,B, AG-5B	•	•	•					
Maule								
M-4, M-4S,T, M-4-180C,S,T, M-4-210, M-4-210C,S, M-5-180C, M-5-200, M-5-210C, M-5-210TC, M-5-220C	•	•			•	•	•	•
M-4C,M-4-210T, M-4-220, M-4-220C,S,T	•	•						
M-5-235C, M-6-180, M-6-235, M-7-235, M-7-235A,B,C, M-7-260, M-7-260C, M-7-420AC, MT-7-235, MT-7-260, MT-7-420, MX-7-160, MX-7-180, MX-7-235, MX-7-235A,B,C, MX-7-420, MXT-7-180, MXT-7-160, MX-7-180A,B,C, MXT-7-180A, M-8-235	•	•			•	•	•	•
M-7-420A, MS-7-180AC, MX-7-160C	•	•						
Mooney								
M20, M20A,B,C,D,E,F,G,J,K,L,M,R,S, M20TN, M22	•	•						
Piper								
J3C-40, J3C-50, J3C-50S, J3C-65, J3C-65S, J3F-50, J3F-50S, J3F-60, J3F-60S, J3F-65, J3F-65S, J3L, J3L-S, J3L-65, J3L-65S, J4, J4A, J4A-S, J4E	•	•	•					
PA-11, PA-11S, PA-15, PA-16, PA-16S, PA-17	•	•	•					
PA-18, PA-18 "135", PA-18 "125", PA-18 "150", PA-18A, PA-18A "135", PA-18A "150"	•	•	•					
PA-18AS "125", PA-18AS "135", PA-18AS "150", PA-18S, PA-18S "105", PA-18S "125", PA-18S "135"	•	•	•					
PA-18S "150", PA-19, PA-19S, PA-20, PA-20 "115", PA-20 "135", PA-20S, PA-20S "115", PA-20S "135"	•	•	•					
PA-22, PA-22-108,135,150,160, PA-22S-135,150,160	•	•	•					
PA-23, PA-23-160,235,250, PA-E23-250, PA-24, PA-24-250,260,400,	•	•	•					
PA-25, PA-25-235,260	•	•	•		•	•	•	•
PA-28-140,150,151,160,161,180,181,201T,235,236, PA-28R-180,200,201,201T, PA-28RT-201,201T, PA-28S-160,180	•	•	•					
PA-30, PA-31, PA-31-300,325,350, PA-31P, PA-31P-350, PA-31T, PA-31T1,T2,T3	•	•	•					
PA-32-260,300,301, PA-32-301FT, PA-32-301T, PA-32-301XTC, PA-32R-300,301,301T, PA-32RT-300,300T, PA-32S-300	•	•	•					
PA-34-200,200T, PA-34-220T, PA-36-285, PA-36-300, PA-36-375, PA-38-112, PA-39, PA-40, PA-44-180, PA-44-180T	•	•	•					
Socata								
TB9,10,20,21, TB200, MS880B, MS885, MS894A, MS893A, MS892A-150, MS892E-150, MS893E, MS894E, 100S, 150T, 150ST, 235C,E	•	•	•		•	•	•	•
Viking Air Limited								
DHC-6-1,100,200,300, DHC-2 Mk.1,II,III, DHC-3	•	•	•	•				
DHC-6-400	•	•	•	•	•	•	•	•

Description	P/N	Certification	Figure	Watts	Voltage	Lumens	Weight	Dimensions
Landing								
36-4313 Landing	01-1030-4313	FAA-PMA/STC	1	95	14 V	11,000	11.5 oz	4.4" x 4.4" x 2.1"
36-4313 HX Landing with Pulse	01-1030-4313-H	FAA-PMA/STC	2	95	14 V	11,000	11.5 oz	4.4" x 4.4" x 2.1"
36HX Landing with Pulse	01-1030-H-A	FAA-PMA/STC	3	45	9-36 VDC	4,950	10.1 oz	4.4" x 4.4" x 1.9"
36LX Landing	01-1030-L-A	FAA-PMA/STC	4	45	9-36 VDC	4,950	10.1 oz	4.4" x 4.4" x 1.9"
36-4596 Landing	01-1030-4596	FAA-PMA/STC	5	100	28 V	11,000	11.5 oz	4.4" x 4.4" x 2.1"
36-4596 HX Landing with Pulse	01-1030-4596-H	FAA-PMA/STC	6	100	28 V	11,000	11.5 oz	4.4" x 4.4" x 2.1"
46HX Landing with Pulse	01-2130-HX	FAA-PMA/STC	7	70	9-36 VDC	7,700	20.0 oz	5.6" x 5.6" x 1.7"
46LX Landing	01-2130-LX	FAA-PMA/STC	8	70	9-36 VDC	7,700	20.0 oz	5.6" x 5.6" x 1.7"
46-4580 Landing	01-2230-4580	FAA-PMA/STC	9	170	28 V	19,250	20.0 oz	5.6" x 5.6" x 1.7"
46-4580-HX Landing with Pulse	01-2230-4580-H	FAA-PMA/STC	10	170	28 V	19,250	20.0 oz	5.6" x 5.6" x 1.9"
64-4559 Landing			11					
SunSpot PCx	900-01-100-A	FAA-PMA/STC	12	100	28 V	11,000	11.5 oz	4.4" x 4.4" x 2.25"
Taxi								
36-4314 Taxi	01-1030-4314	FAA-PMA/STC	13	95	14 V	11,000	11.5 oz	4.4" x 4.4" x 2.1"
36-4314 HX Taxi with Pulse	01-1030-4314-H	FAA-PMA/STC	14	95	14 V	11,000	11.5 oz	4.4" x 4.4" x 2.1"
36HX Taxi with Pulse	01-1030-H-B	FAA-PMA/STC	15	45	9-36 VDC	4,950	10.1 oz	4.4" x 4.4" x 1.9"
36LX Taxi	01-1030-L-B	FAA-PMA/STC	16	45	9-36 VDC	4,950	10.1 oz	4.4" x 4.4" x 1.9"
36-4587 Taxi	01-1030-4587	FAA-PMA/STC	17	100	28 V	11,000	11.5 oz	4.4" x 4.4" x 2.1"
36-4587 HX Taxi with Pulse	01-1030-4587-H	FAA-PMA/STC	18	100	28 V	11,000	11.5 oz	4.4" x 4.4" x 2.1"
46LX Taxi	01-2130-LX	FAA-PMA/STC	19	70	9-36 VDC	7,700	20.0 oz	5.6" x 5.6" x 1.7"
46-4554 Taxi	01-2230-4554	FAA-PMA/STC	20	170	28 V	19,250	20.0 oz	5.6" x 5.6" x 1.7"
46-4554 HX Taxi with Pulse	01-2230-4554-H	FAA-PMA/STC	21	170	28 V	19,250	20.0 oz	5.6" x 5.6" x 1.9"
SunSpot PCx	900-01-100-C	FAA-PMA/STC	22	100	28 V	11,000	11.5 oz	4.4" x 4.4" x 2.25"
Connector Kit								
Molex Connector Kit	KIT-0001							

253-848-9349
SpencerAircraft.com

Spencer Aircraft provides the information in this catalog for its customers as a ***reference only*** and it is not intended for design or guarantee of accuracy. Though it is our policy to ship all orders in a timely manner, Spencer Aircraft cannot guarantee that all items will be in stock at all times.

Cross Reference for Landing Lights

Incandescent Bulb						AeroLEDs LED Equivalent					
GE Bulb #	Size	Voltage	Watts	Peak Candela	Total Lumens	Model	P/N	Voltage	Watts	Peak Candela	Total Lumens
4509	PAR36	14	100	60,000	1,500	SunSpot 36 LX	01-1030-L-A or 01-1030-H-A	14/28	45	65,000	4,950
						SunSpot 36 HX	01-1030-4313 or 01-1030-4313-H	14	95	150,000	11,000
4313	PAR36	14	250	90,000	3,750	SunSpot 36 LX	01-1030-L-A or 01-1030-H-A	14/28	45	65,000	4,950
						SunSpot 36 HX	01-1030-4313 or 01-1030-4313-H	14	95	150,000	11,000
4595	PAR36	14	100	60,000	1,500	SunSpot 36 LX	01-1030-L-A or 01-1030-H-A	14/28	45	65,000	4,950
						SunSpot 36 HX	01-1030-4313 or 01-1030-4313-H	14	95	150,000	11,000
4596	PAR36	28	250	90,000	3,750	SunSpot 36-4596 HX	01-1030-4596 or 01-1030-4596-H	28	100	150,000	11,000
4700	PAR36	14	100	75,000	1,500	SunSpot 36 HX	01-1030-4313 or 01-1030-4313-H	14	95	150,000	11,000
Q4631	PAR36	14	250	80,000	3,750	SunSpot 36 LX	01-1030-L-A or 01-1030-H-A	14/28	45	65,000	4,950
						SunSpot 36 HX	01-1030-4313 or 01-1030-4313-H	14	95	150,000	11,000
Q4632	PAR36	14	250	75,000	3,750	SunSpot 36 LX	01-1030-L-A or 01-1030-H-A	14/28	45	65,000	4,950
						SunSpot 36 HX	01-1030-4313 or 01-1030-4313-H	14	95	150,000	11,000
4522	PAR46	28	250	290,000	3,750	SunSpot 46 LX	01-2130-LX or 01-2130-HX	14/28	70	150,000	7,700
						SunSpot 46 HX	01-2230-4580-H	28	175	250,000	19,250
4537	PAR46	14	250	200,000	3,750	SunSpot 46 LX	01-2130-LX or 01-2130-HX	14/28	70	150,000	7,700
4553	PAR46	28	250	300,000	3,750	SunSpot 46 LX	01-2130-LX or 01-2130-HX	14/28	70	150,000	7,700
						SunSpot 46 HX	01-2230-4580 or 01-2230-4580-H	28	175	250,000	19,250
4580 or 4581	PAR46	28	450	400,000	6,750	SunSpot 46 HX	01-2230-4580 or 01-2230-4580-H	28	175	250,000	19,250
Q4681	PAR46	28	450	310,000	6,750	SunSpot 46-4580	01-2230-4580 or 01-2230-4580-H	28	175	250,000	19,250
Q4566,4566	PAR46	28	450	150,000	6,750	SunSpot 46-4580	01-2230-4580	28	175	250,000	19,250
Q4567, Q4580, Q4581						SunSpot 46 HX	01-2230-4580-H	28	175	250,000	19,250
Q4559, 4559, Q4559x, Q4559XX	PAR64	28	600	600,000	9600	SunSpot 64-4559	01-2230-4559	28	225	400,000	24,750

Cross Reference for Taxi Lights

Incandescent Bulb						AeroLEDs LED Equivalent					
GE Bulb #	Size	Voltage	Watts	Peak Candela	Total Lumens	Model	P/N	Voltage	Watts	Peak Candela	Total Lumens
4505	PAR36	28	50	45,000	800	SunSpot 36 LX	01-1030-L-B or 01-1030-H-B	9-40	45	15,000	4,950
4503	PAR36	14	40	11,000	640						
4502	PAR36	28	50	10,000	800						
4591, Q4951	PAR36	28	100	20,000	1500	SunSpot 36-4587/HX	01-1030-4587 or 01-1030-4587-H	28	100	50,000	11,000
4587	PAR36	28	250	40,000	4000						
4594	PAR36	28	100	20,000	1500						
4589	PAR36	28	50	5,000	800	SunSpot 36 LX	01-1030-L-B or 01-1030-H-B	14/28	45	15,000	4,950
4593	PAR36	28	50	1,500	800	SunSpot 36 LX	01-1030-L-B or 01-1030-H-B	14/28	45	15,000	4,950
4626	PAR36	28	150	30,000	2400	SunSpot 36 LX	01-1030-L-B or 01-1030-H-B	14/28	45	15,000	4,950
						SupSpot 4587 HX	01-1030-4587-H	28	100	50,000	11,000
4627	PAR36	28	100	3,000	1600	SunSpot 36 LX	01-1030-L-B or 01-1030-H-B	14/28	45	15,000	4,950
						SunSpot 36 HX	01-1030-4314 or 01-1030-4314-H	14	95	50,000	11,000
						SunSpot 4587 HX	01-1030-4587-H	28	100	50,000	11,000
4551	PAR46	28	250	75,000	4000	SunSpot 46 LX/HX	01-2230-4554 or 01-2230-4554-H	28	175	100,000	19,250
Q4551				60,000		SunSpot 46 LX/HX	01-2230-4554 or 01-2230-4554-H	28	175	100,000	19,250
4554	PAR46	28	450	90,000	7200	SunSpot 46 LX/HX	01-2230-4554 or 01-2230-4554-H	28	175	100,000	19,250
4570	PAR46	28	150	32,000	2400	N/A					
4571	PAR46	28	150	7,000	2400	N/A					
4572						SunSpot 46 HX	01-2230-4554-H	28	175	100,000	19,250
4582	PAR46	28	450	20,000	7200	SunSpot 46 LX Taxi	01-2230-4554	28	175	100,000	19,250
Q4629	PAR46	28	250	20,000	4000	N/A					
Q4554, Q5551, Q5554, Q4554, Q4597, Q4598						SunSpot 46 LX/HX	01-2230-4554 or 01-2230-4554-H	28	175	100,000	19,250

Models	Kit P/N	Kit Contents
Beechcraft		
65-90, 65-A90, 65-A90-1, 65-A90-2, 65-A90-3, 65-A90-4, B90, C90, C90A, C90GT, E90, H90, 100, A100, A100A, A100C, B100 200, A200, 200T, A200C, 200C, A200CT, 200CT, B200, B200C, B200T, B200CT, 300, B300, B300C, B200GT, B200CGT	KIT-0041	2 SunSpot 36 LX Landing Lights (01-1030-L-A) 1 SunSpot 36 LX Taxi Light (01-1030-L-B)
Cessna		
208, 208B	KIT-0042	1 SunSpot 36-4587 Taxi Light (01-1030-4587) 1 SunSpot 46-4580 Landing Light (01-2230-4580)
Pilatus		
Pilatus, PC12	KIT-0034	2 Pilatus Landing Lights (900-01-100-A) 1 Pilatus Taxi Light, (900-01-100-C) 2 Pilatus Spec Landing and Taxi Connectors

Spencer Aircraft provides the information in this catalog for its customers as a ***reference only*** and it is not intended for design or guarantee of accuracy. Though it is our policy to ship all orders in a timely manner, Spencer Aircraft cannot guarantee that all items will be in stock at all times.



SunRay Plus
Mount Kit
P/N KIT-0035

Pulsar NS Cessna
Wingtip Fairing Kit
P/N KIT-01-1091
Use with:
11-1280-B-12
11-1280-B-24



SunBeacon II LED
Twist Mount Kit
P/N 01-1096



Pulsar N Series
Mount Kit
P/N KIT-0008





Wing Tip Types	Integrated Operational Modes	Multi-Voltage Operation	Power (Watts)	Lumens	Cardela	Recognition Wig-Wag Mode
Quasar Cx LED lighted wing tips	Landing	Yes, 14/28v	190	17,000+	300,000+	Built-in
	Taxi		38	3,500	26,000+	
	Recognition		95	8,500+	150,000+	
Whelen PAR36 LED lighted wing tips	None		38	3496	120,000	No
HID lighted wing tips	None		70	6440	250,000	No

Lighted Wing Tip Kit P/N SA-0523565-2930LL
Aircraft
150, 150A,B,C,D,E,F,G,H,J,K,L,M, A150L,M
152, A152
170, 170A,B
172, 172A,B,C,D,E,F,G,H,J,K,L
F172D,E,F,G,H,K,L
FP172D, P172D
175, 175A,B,C
180, 180A,B,C,D,E,F,G,H
182, 182A,B,C,D,E,F,G,H,J,K,L,M,N
185, 185A,B,C,D,E, A185E
210-5 (205), 210-5A (205A)
206, U206, U206A,B,C,D,E, TU206A,B,C,D,E
P206, P206A,B,C,D, TP2006A,B,C,D, P206E, TP206E
207, 207A, T207, T207A
210, 210A,B,C,D,E,F, T210F
Lighted Wing Tip Kit P/N SA-0723200-56LL
172M,N,P,Q,R,S, 172RG, R172K
F172,M,N,P
180J,K
182P,Q,R,S, R182, TR182, T182
182T, T182T, F182P,Q, FR182
A185F
U206F,G, TU206F,G, 206H, T206H

Stene Wing Tips for AeroLEDs Lighting

Optimized for use with AeroLEDs
Pulsar LED navigation/strobe lighting

The wing tips are built by Stene Aviation using the latest resins and aviation grade E-glass weaves to insure the highest quality of part.

Aircraft	LH SA-0523565-26LED	LH SA-0723200-5LED	RH SA-0523565-30LED	RH SA-0723200-6LED
150, 150A,B,C,D,E,F,G,H,J,K,L,M, A150L,M	•		•	
152, A152	•		•	
170, 170A,B	•		•	
172, 172A,B,C,D,E,F,G,H,J,K,L	•		•	
172M,N,P,Q,R,S, 172RG, R172K		•		•
175, 175A,B,C	•		•	
180, 180A,B,C,D,E,F,G,H	•		•	
180J,K		•		•
182, 182A,B,C,D,E,F,G,H,J,K,L,M,N	•		•	
182P,Q,R,S, R182, TR182, T182		•		•
185, 185A,B,C,D,E, A185E	•		•	
A185F		•		•
210-5 (205), 210-5A (205A)	•		•	
206, U206, U206A,B,C,D,E, TU206A,B,C,D,E	•		•	
U206F,G, TU206F,G, 206H, T206H		•		•
P206, P206A,B,C,D, TP2006A,B,C,D	•		•	
207, 207A, T207, T207A	•		•	
210, 210A,B,C,D,E,F, T210F	•		•	



253-848-9349
SpencerAircraft.com

Spencer Aircraft provides the information in this catalog for its customers as a ***reference only*** and it is not intended for design or guarantee of accuracy. Though it is our policy to ship all orders in a timely manner, Spencer Aircraft cannot guarantee that all items will be in stock at all times.

BRACKETT AIR FILTERS

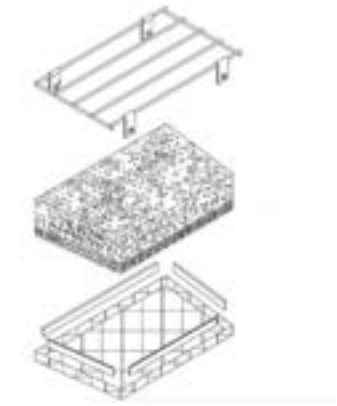





INSTALLATION TIPS:

- In cases where the filter frame is to be attached, occasionally a broken or bent airloc fastener is found. Restoring the ability to secure the filter is of prime importance, any good method of bolting or screwing the frame on is acceptable.
- Check to make sure that the gasket makes good contact around the periphery and it is compressed to approximately 1/2 the original thickness.
- If the element wettant congregates to one end, blot the excess with clean dry cloth. If your installation tools encounter wettant, WD-40 will help with clean up.
- Check and be sure the rest of the intake is in good shape and look for torn rubber couplings, worn carburetor heat valve, or alternate air doors. With these in good condition, you can feel confident your engine is operating in a clean air environment.
- For continued inservice instructions, reference Form I-194 located on the back side of the Filter Element Bag.



APPLICATION DATA

AIRCRAFT MODELS	FILTER ASSEMBLY	ELEMENT NUMBER
NORTH AMERICAN		
AT6 (SNJ)	BA-8310	BA-8305
PARTENAVIA		
P68 , P68B , P68C	BA-162	BA-162E
PIPER		
600 , 601	N/R	BA-4
J-3 , J-4 , J-5	BA-4106	BA-4108
PA-11 , 11S , 12 , 12S		
PA-16 , 17 , 18		
PA-18-150 , PA-18A-150 , PA-18S-150 , PA-18AS-150 , S/N 18-6964 & UP WITH TCDS ITEM 110 INSTALLED	BA-112	BA-13
PA-19	BA-4106	BA-4108
PA-20 , 115 , 135 , PA-22-ALL		
PA-23 , 160	BA-3110A	BA-7305
PA-23-235 , 250	BA-104	BA-3
PA-23-250 , PA-E23-250 S/N 27 2505 & UP	BA-115	BA-15
PA-23-250 , E23-250 W/TURBO LYC.	BA-3510	BA-3505
PA-23-250 WITH AIR RESEARCH TURBO	BA-8610	BA-8605

APPLICATION DATA

AIRCRAFT MODELS	FILTER ASSEMBLY	ELEMENT NUMBER
PIPER		
PA-24-180 UP TO S/N 1476	BA-3110A	BA-7305
PA-24-250 UP TO S/N 1476	BA-3210	BA-3205
PA-24-180 & PA-24-250 S/N 1477 & UP , PA-24-250 S/N 103-1476 WITH PIPER KIT 754-285 INSTALLED , PA-24-260 S/N 4000-4802 EXCEPT 24-4783	BA-104	BA-3
PA-24-260C	BA-4510	BA-4505
PA-25-235 , 260	BA-104	BA-3
PA-28-140 , 150 , 160 , 180 , 235		
PA-28-181 , 201T		
PA-28R-201T		
PA-28RT-201T		
PA-28R-201 , PA-28RT-201 , PA-28R-180 , PA-28R-200	BA-105	BA-10
PA-28-151 , 161	N/R	BA-16
PA-28-236 S/N 28-7911283 & UP	BA-2910	BA-2905
PA-30-160	BA-105	BA-10
PA-30 WITH RAY JAY TURBO	BA-121	BA-27
PA-31 , PA-31-300 , -310 , -325 , -350	BA-100	BA-7

Spencer Aircraft provides the information in this catalog for its customers as a ***reference only*** and it is not intended for design or guarantee of accuracy. Though it is our policy to ship all orders in a timely manner, Spencer Aircraft cannot guarantee that all items will be in stock at all times.

BRACKETT AIR FILTERS

APPLICATION DATA		
AIRCRAFT MODELS	**FILTER ASSEMBLY**	**ELEMENT NUMBER**
PIPER		
PA-31P , 31P-350	BA-3310	BA-3305
PA-32-260	BA-104	BA-3
PA-32-300 S/N 76-40001 & UP PA-32R-300 , PA-32RT-300 , PA-32R301		
PA-32-300 WITH IO-540-K1A5	BA-115	BA-15
PA-32RT-300T	BA-100	BA-7
PA-32-301T , 32R-301T	BA-3010	
PA-34-200T , 220T	BA-104	BA-3110A
PA-34-200 WITH LYC. IO360O01E6 OR LIO-360-C1E6	BA-105	BA-10
PA-36-300 WITH CONT. 6-285-B , PA-36-375	BA-104	BA-3
PA-38	BA-4106	BA-4108
PA-39	BA-105	BA-10
PA-39 WITH RAY JAY TURBO	BA-121	BA-27
PA-44-180	BA-105	BA-10
PA-180T	BA-3510	BA-3505
ROBINSON		
R-22	BA-110	BA-23
STEARMAN		
ALL SERIES 75	BA-118	BA-18
STINSON		
108 , 108-1 , -2 , -3	BA-9110	S-108K , BA-9105
SWIFT		
GC-1A , GC-1B	BA-4106	BA-4108
TAYLORCRAFT		
VARGA		
2150A	BA-4106	BA-4108
AERO COMMANDER		
A-9 , A9A , A9B	BA-104	BA-3
100 , 100A	BA-8910	BA-8905
100-180	BA-3910	BA-3905
112 , 112A , 112B		
112TC , 112TC-A , 114 , 114A	BA-4010	BA-4005
500	BA-152	BA-152E
500A , 500B , 560F , 680F , 680FL	BA-151	BA-151E
680FLP , 500U		
560 , 560A , 560E , 680	BA2610L&R	BA-2605L&R
AIRCOUPE		
415C , CD , D , E , G	BA-8810	BA-8805
F-1 , A-1 , A2-2	BA-4106	BA-4108
BEECH		
23 , A23 , A23A A23-19 , A23-19A A23-24 , B23	BA-104	BA-3
C-23 , C24R , A24R B24R , B19	BA-7510	BA-7305
33 , A33 , B33 C33 , E33 , F33	BA-7110	BA-7112

APPLICATION DATA		
AIRCRAFT MODELS	**FILTER ASSEMBLY**	**ELEMENT NUMBER**
BEECH		
C33A , E33A , E33C F33A , F33C , G33	BA-7210	BA-7112
35 , A35 , B35 THRU S/N D2605	BA-7310	BA-7305
B35 , C35 , D35 , E35 , F35 G35 , G35 , J35 , K35 M35 , N35 , P35 , 35R	BA-7110	BA-7112
S35 THRU S/N D7671	BA-7410	
S35 , V35 , V35A , V35B , 36 A36 , A36TC , B36TC , A45 (T-34) B45 (T-34A) , D45 (T-34B) WITH STC SA 1450 SW CONT. IO-520	BA-7210	
T34A , B , B-45 , A45 , D45 WITH CONT. O-470-4 , -13 , -13A (PENDING)	BA-5910	BA-5905
50 , B50 , C50 , D50 , D50A D50B , D50C , D50E	BA-4810	BA-4805
E50 (L-23D , RL-23D) F50 , G50 , H50 , J50	BA-100	BA-7
S55 , A55 , B55	BA-7610	BA-7605
C55 , D55 , E55 , 355A S/N TE768-1078 58 THRU S/N TH 740	BA-6210-1	BA-6205
E55 , 355A TE-1079 & UP	BA-7710	BA-7705
58 , 58A S/N TH741 & UP		
A65 , 70 65-B80 , B88	BA-100	BA-7
76	BA-7010	BA-7005
77	BA-2010	BA-6108
95 , B95 , B95A , D95A	BA-7810	BA-7805
BELL		
47G-2 , 2A , -2A-1 47G-3 , -3B , -3B-1 , -3B-2 , -3B-2A 47J , 47J-2 , 47J-2A	BA-102	BA-2
47G-3B , 3B-1 , 3B-2 , -4 , -4A -5 , 47J-2 , -2A	BA-103	BA-9
BELLANCA		
14-19-3A	BA-8110	BA-8103-1
17-30		
17-30A	BA-104	BA-3
17-31A , -ATC	BA-249	PEND
BRANTLY		
B-2 , B-2B	BA-104	BA-3
BRITTEN NORMAN		
BN-2A-6 WITH LYC. O-540-E4C5 BN-2 , 2A , 2A-2 , 2A-3 , 2A-8 2A-9 , 2A-20 , 2A-21 , 2A-27 2B-20 , 2B-21 , 2B-26 , 2B-27	BA-104	BA-3
CESSNA		
120 , 140 , 140A , 150 , 150A B , C , D , E , F , G , H , J , K , L , M A150M , 152 , A152 F150G , H , J , K , L , M FA150K , L , F152 , FA152	BA-4106	BA-4108
170 , 170A , B , 172 , 172A B , C , D , E , F , G , H , I , K , L , M F172D , E , F , G , H , K , L , M	BA-5110	BA-6108
172N , P , F172N , P	BA-5110A	

253-848-9349
SpencerAircraft.com

Spencer Aircraft provides the information in this catalog for its customers as a ***reference only*** and it is not intended for design or guarantee of accuracy. Though it is our policy to ship all orders in a timely manner, Spencer Aircraft cannot guarantee that all items will be in stock at all times.

BRACKETT AIR FILTERS

APPLICATION DATA

AIRCRAFT MODELS	FILTER ASSEMBLY	ELEMENT NUMBER
CESSNA		
R172K , FR172E , F , G ,H , J , K	BA-111	BA-24
172 RG	BA-5810	BA-5805
175 , 175A , B , C	BA-101	BA-8
177 , 177A , B , RG , F177RG	BA-5710	BA-5705
180 (53'-55')	BA-8010	BA-8005
180A , B , C , D , E , F , G , H , J , K	BA-8110	BA-8103-1
182 , 182A , B , C , D , E , F , G , H J , K , L , M , N , P , Q , R F182P , F182Q		
R-182 , TR-182 , T182 , FR182	BA-2510	BA-2505
185 , 185A , B , C , D , E A185E , A185F	BA-8110	BA-8103-1
188 , 188A	BA-114	BA-14A
190 , 195 , A , B	BA-8410	BA-8405
205 , A	BA-2110	BA-2305
P206 , A , B , C , D , E U206A , B ,C , D , E , F , G	BA-2210L	BA-2205L
TP206 , A , B , C , D , E TU206A , B , C , D , E , F , G	BA-2410	BA-2405
207 , 207A	BA-2210L	BA-2205L
T207 , T207A	BA-2410	BA-2405
210 , 210A , B , C	BA-2110	BA-2305
210D , E , F , G , H , J , K , L , M , N (TO S/N 64535 WITHOUT AIR)	BA-2210L	BA-2205L
	BA-2210R	BA-2205R
210N (S/N 64536 & UP WITH AIR , 210R	BA-2410	BA-2405
P210R ALL	BA-8710	BA-8705
T-210F , G , H , J , K , L , M , N	BA-2410	BA-2405
T-303	BA-5210	BA-5205
310 , A , B	BA-2110	BA-2305
310F , G , H , I , J , K , L	BA-2310	
310N , P , Q , T310P , T310Q	BA-107	BA-12
310R	BA-117	BA-17
T310R	BA-108	BA-13
336	BA-111	BA-24
337 , A , B , C , D , E , F , G , H F337E , F , G , H		
P337 , T337 REAR ENGINE	BA-5810	BA-5805
340 , 340A	BA-109	BA-22
401 S/N 145 TO 401B S/N 221	BA-107	BA-12
402 S/N 145 TO 402B S/N 800		
402B S/N 0801 & UP	BA-108	BA-13
402C	BA-109	BA-22
404	BA-130	BA-30
411 , 411A	BA-3810	BA-3805
414 , A	BA-109	BA-22
421 , 421A , B , C	BA-108	BA-13
L-19	BA-101	BA-8
T41B , C , D	BA-111	BA-24
T-50 , AT-17 , UC-78 , JRC-1	BA-2710	BA-2705

APPLICATION DATA

AIRCRAFT MODELS	FILTER ASSEMBLY	ELEMENT NUMBER
CHAMPION		
8KCAB , 8GCBC 7KCAB , 7GCBC 7GCAA	BA-8110	BA-8103-1
7GCAA , 7GCBC 7KCAB , 8KCAB 7ECA	BA-106	BA-11
7GC , 7GCA , 7GCBC , 7GCB	BA-104	BA-3
7HC , 7KC		
7ECA WITH CONT. O-200-A 7ACA , 7ECA , 7FC , 65CA	BA-4106	BA-4108
DEHAVILLAND		
DCH-2 (L-20)	BA-8210-1	BA-8205
GREAT LAKES		
2TIA-2	BA-101	BA-8
GRUMMAN AMERICAN		
AA-1 , AA-1A , 11-1B AA-1C , AA-5	BA-4210	BA-4108
AA5A	N/R	BA-19
AA5B TIGER , GA-7	BA-120	BA-20
AGCAT G164 , G164A	BA-8210	BA-8205
G164B	BA-105	BA-10
HILLER		
UH-12 , UH-12A , B , C , D , E	BA-102	BA-2
HELIO		
H295	N/R	BA-21
HUGHES		
269A , A-1 , B , C	BA-102	BA-2
LAKE		
LA4 , LA4-200	BA-3110	BA-7305
LUSCOMBE		
8 , 8A THRU 8F , T8F	BA-4106	BA-4108
MAULE		
M-4-210 , M-4-210C M-4-210S , M-4-210T M-5-210C	BA-111	BA-24
MA-4 , M-4C , M-4S , M-4T M-4-220 , M-4-220C M-4-220S , M-4-220T M-4-180C , M-4-180S M-4-180T , M-5-220C M-5-235C , M-5-180C M-5-210TC , M-6-180 M-6-235 , MX7-180 , M-7-235	BA-6110	BA-6108
MOONEY		
M-10	BA-4106	BA-4108
M-18C	BA-5110	BA-6108
M20 , M20A , B , C , D , G	BA-6110	
M20E , F	BA-6310	BA-6305
M20J	BA-6210	BA-6205
NAVION		
B , G , H	BA-4310	BA-4305
A	BA-113	BA-25
B WITH LYC GO-435	BA-116	BA-26

Spencer Aircraft provides the information in this catalog for its customers as a ***reference only*** and it is not intended for design or guarantee of accuracy. Though it is our policy to ship all orders in a timely manner, Spencer Aircraft cannot guarantee that all items will be in stock at all times.

CHAMPION OIL FILTERS

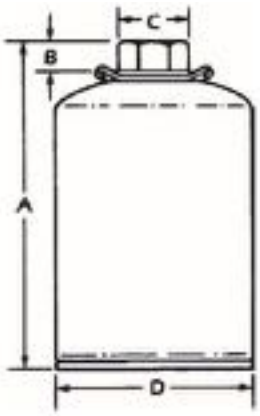



Shorter Installed Height
Shortened by ½", with no impact to the filter media's performance.

Improved Spring
Replace old "leaf" spring with an improved coil spring design.

Thicker-Walled Can
Increased wall thickness for improved structural integrity.

Stronger Center Tube
Added strength, with collapse pressures more than double.

New Inlet Design
New eight-hole design for approximately 30% greater inlet flow area.

Increased Lid Thickness
Increased thickness of seaming lid by approximately 35% for higher burst and impulse testing.

Improved Baseplate Thread
Improved rolled thread, without affecting tolerances on the thread dimensions.

Zinc-Plated Stud
Incorporated new zinc-plated stud for increased protection against rust and corrosion.

By-Pass Valve
Meets TCM Specifications



POPULAR SPIN-ON OIL FILTERS

CHAMPION P/N	A	B	C	D	THREAD (SAE)	DRY WEIGHT LBS./KG.
CH48103-1	4.48" (11.4 CM)	0.43" (1.09 CM)	1.00" HEX (2.54 CM)	3.71" (9.4 CM)	13/16-16-UNS-2B	1.32 / 0.59
CH48104-1	5.73" (14.6 CM)					1.41 / 0.64
CH48108-1	4.48" (11.4 CM)				3/4-16-UNF-2B	1.40 / 0.64
CH48109-1	5.73" (14.6 CM)					1.51 / 0.68
CH48110-1	4.48" (11.4 CM)				3/4-16-UNF-2A	1.38 / 0.63
CH48111-1	5.73" (14.6 CM)					1.47 / 0.67

APPLICATION DATA

AIRCRAFT MODELS	Engine Model	Champion Spin-On Filter	CHAMPION ELEMENT
AEROSPATIABLE (SOCATA)			
TB9 TAMPICO	O-320-D2A	CH48110-1	CFO-100-1
TB10 TOBAGO	O-360-A1AD		
TB20 TRINIDAD	IO-540-C4D5D	CH48103-1	
TB21 TRINIDAD TC	TIO-540-AB1AD		
TC30	AEIO-540-L1B5D		
AEROSTAR (SEE PIPER)			
APACHE			
PA-23 "150"	O-320	CH48110-1	CFO-100-1
PA-23 "160"			
PA-23 "235"	ITIO-541-E		
AZTEC			
PA-23 "250"	O-540	CH48110-1	CFO-100-1
"C" PA-23	IO-540		
PA-23 TURBO "250" "C" , "D" , "E" , "F"			
PA-23 TURBO "250"	TIO-540		
ARROW			
PA-28R "180"	IO-360 , L2A	CH48110-1	CFO-100-1
PA-28R "180"	IO-360-C1CD	CH48103-1	
PA-28R "200" ARROW II	IO-360 , L2A	CH48110-1	
PA-284 "200" TURBO ARROW III	TSIO-360	CH48108-1	--
PA-28-R-201T	TSIO-360-F1		
BEECH BARON			
C55 , D55 , E55 , 58	IO-520	--	CFO-100-1
C55 , D55 , E55 , 58	IO-520C	CH48109-1	--
56TC , A56TC	ITIO-541-E	CH48104-1	CFO-101-1
BARON 58P	TSIO-520-L ++	--	CFO-100-1
BARON 58P , 58TC	TSIO-520-L , -W , -B	CH48108-1	--
BARON 58C , 550	IO-550	CH48109-1	

APPLICATION DATA

AIRCRAFT MODELS	Engine Model	Champion Spin-On Filter	CHAMPION ELEMENT
BEECH BONANZA			
E33A , F33A , F33B , F33C	IO-520		CFO-100-1
E33A , F33A , F33B , F33C	IO-520B	CH48109-1	--
G-33	IO-470N	CH48108-1	
H-35	O-470		
J , K , M-35	IO-470-C		
N , P-35	IO-470-N		
S35 , V35 , V35A , V35B	IO-520		CFO-100-1
S35	IO-520B	CH48109-1	--
V35TC , V35A-TC , V35B-TC	TSIO-520	--	CFO-100-1
V35TC , V35A-TC , -V35B-TC	TSIO-520D	CH48109-1	--
V35 , V35A , V35B	IO-520B		
36 , A36			
A36TC , B36TC	TSIO-520-UB		
B36-550	IO-550		
BELLANCA			
17-31A , 17-31ATC	IO-540-K	CH48110-1	CFO-100-1
17-31A VIKING			
17-31A VIKING	IO-520-D	--	
17-31ATC TURBO	TIO-540	CH48110-1	
CESSNA			
150 A THRU M	O-200	CH48108-1	CFO-100-1
F150 F THRU M			
A150L			
FA150			
152	O-235-L2C , H2C	CH48110-1	--
162	O-200-D	CH48108-1	
C-172			
172 A THRU H	O-300	CH48108-1	CFO-100-1
172 I THRU M	O-320	CH48110-1	
172N	O-320-H2AD	CH48103-1	--
172P	O-320-D2J	CH48111-1	CFO-101-1

*These filters are equipped with an internal bypass valve. They can be used on any TCM engine equipped with or without a bypass valve in the oil filter engine adapter.

Spencer Aircraft provides the information in this catalog for its customers as a ***reference only*** and it is not intended for design or guarantee of accuracy. Though it is our policy to ship all orders in a timely manner, Spencer Aircraft cannot guarantee that all items will be in stock at all times.

CHAMPION OIL FILTERS

APPLICATION DATA

AIRCRAFT MODELS	Engine Model	Champion Spin-On Filter	CHAMPION ELEMENT
CESSNA			
F172 D THRU H	O-300	CH48108-1	CFO-100-1
FR172E THRU K	IO-360		
R172K	IO-360-K		--
172R AND S	IO-360-L2A	CH48110-1	
172RG	O-360-F1A6		CFO-100-1
172S	IO-360-L2A		--
177	O-320		CFO-100-1
177A , B	O-360-A1F6D	CH48103-1	
177RG	IO-360-A1B6D		
180 A THRU J	O-470	CH48108-1	
180Q	O-470-U ++		
180 S/N 53087 & UP			--
182			
182 A THRU P	O-470	CH48108-1	CFO-100-1
182Q , R	O-470-U ++		
182S	IO-540-AB1A5	CH48110-1	--
A182 K THRU N	O-470	CH48108-1	CFO-100-1
182 S/N 67042 & UP	O-470-U ++		--
F182 S/N 00130 & UP			
R182	O-540-J3C5D	CH48103-1	CFO-100-1
T182			
TR182 , FTR182			
185 A THRU D	IO-470 , IO-520	CH48108-1	
A185E , F			
185 S/N 03852 & UP	IO-520		--
188	O-470 , IO-520		CFO-100-1
188 S/N 03474 & UP	IO-520D	CH48109-1	--
T188 S/N 03474 & UP	TSIO-520		
205A	IO-470	CH48108-1	CFO-100-1
C-206	IO-540	CH48110-1	
206 A THRU G	IO-520	CH48108-1	
206H	IO-540-AC1A5	CH48110-1	--
206 S/N 05030 & UP	IO-520	CH48109-1	
206 S/N 05030 & UP	TSIO-520		
U206	IO-520	CH48108-1	CFO-100-1
T-260H	TIO-540-AJ1A	CH48110-1	--
TU206	TSIO-520	CH48108-1	CFO-100-1
P206	IO-520		
TP206	TSIO-520		
207	IO-520		
207 S/N 05227 & UP		CH48109-1	--
T207 S/N 05227 &UP	TSIO-520		
T207		CH48108-1	CFO-100-1
210	IO-470 , IO-520		
210 S/N 63372-63375 & UP	IO-520	CH48109-1	--
T210 S/N 63372-63375 & UP	TSIO-520	CH48108-1	
P210 S/N 278 & UP			
T210 , P210 S/N 1-277	TSIO-520 ++	CH48108-1	CFO-100-1
T303	LTSIO-520-AE	CH48109-1	--
	TSIO-520-AE		
310 C THRU Q	IO-470	CH48108-1	CFO-100-1
310R	IO-520-M		--
T310P , Q , R	TSIO-520-B		CFO-100-1
320-A	TSIO-470	CH48104-1	--
320-B , C		CH48109-1	CFO-101-1
320-D	TSIO-520	--	CFO-100-1
320-D , E , F	TSIO-520-B	CH48108-1	--
335	TSIO-520-EB	CH48109-1	
336	IO-360	CH48108-1	CFO-100-1

APPLICATION DATA

AIRCRAFT MODELS	Engine Model	Champion Spin-On Filter	CHAMPION ELEMENT
CESSNA			
337	IO-360	CH48108-1	CFO-100-1
P337 , P337H	TSIO-360		
T337H	TSIO-360-H		
340	TSIO-520-K		--
340A	TSIO-520-N , -NB	CH48109-1	CFO-100-1
401/402	TSIO-520-E	CH48108-1	
402C	TSIO520-VB	CH48109-1	
404	GTSIO-520-M	CH48111-1	CFO-101-1
411 S/N 000 THRU 0126	GTSIO-520-C	CH48104-1	--
411 S/N 0127 & UP		CH48111-1	CFO-101-1
414 , 414A	TSIO-520-J , -N	CH48108-1	--
421A , B	GTSIO-520-D , -H	CH48111-1	CFO-101-1
421C S/N 1017 THRU 1404	-L , N , ++		
CHEROKEE CADET			
PA-28 “140”	O-320	CH48110-1	CFO-100-1
PA-28 “150”			
PA-28 “160” , “161”			
PA-28 “180”	O-360		
PA-28 “180” , “181”	O-360-A4M		
PA-28 “235”	O-540		
PA-28 “151”	O-320		
CHEROKEE SIX			
PA-32 “260”	O-540	CH48110-1	CFO-100-1
PA-32 “300”	IO-540		
PA-32R “300”	IO-540-K1AD	CH48103-1 *	
PA-32RT-300T	IO-540-S1AD		
PA-32-301	IO-540-K1G5D		
	TIO-540-S1AD		
PA-32R-301	IO-540-K1G5D		
	TIO-540-S1AD		
CIRRUS AIRCRAFT			
SRV , SR20	IO-360ES	CH48108-1	--
SR22	IO-550N	CH48109-1	
COLUMBIA / LANCAIR			
COLUMBIA 300 , 350	IO-550N	CH48109-1	CFO-100-1
COLUMBIA 400	TSIO-550		
COMANCHE			
PA-24 “180”	O-360	CH48110-1	CFO-100-1
PA-24 “250”	O-540 OR IO-540		
PA-24B , PA-24C “260”			
PA-24 TURBO “260”	IO-540		
COMMANDER			
112 , 112A	IO-360-C , -L2A	CH48110-1	CFO-100-1
112TC	TO-360-C1A6B	CH48103-1	
114	IO-540-T4A5D		
500B , 500C	IO-540	CH48110-1	
700	TIO-540-R2AD	CH48103-1	
DAKOTA			
PA-28-235	O-540-J3A5D	CH48103-1	CFO-100-1
PA-28-201T	TSIO-360-FB	CH48108-1	--
DEBONAIR / BONANZA			
C33A , E33A , E33C	IO-520	--	CFO-100-1
C33A , E33A , F33C	IO-520B	CH48109-1	--
DIAMOND AIRCRAFT			
DA20-1C	IO-240	CH48108-1	CFO-100-1
DA40-180	IO-360	CH48109-1	

*These filters are equipped with an internal bypass valve. They can be used on any TCM engine equipped with or without a bypass valve in the oil filter engine adapter.

Spencer Aircraft provides the information in this catalog for its customers as a ***reference only*** and it is not intended for design or guarantee of accuracy. Though it is our policy to ship all orders in a timely manner, Spencer Aircraft cannot guarantee that all items will be in stock at all times.

APPLICATION DATA

AIRCRAFT MODELS	Engine Model	Champion Spin-On Filter	CHAMPION ELEMENT
DUCHESS			
--	LO-360-A1G6D & O-360-A1G6D	CH48103-1	--
77			
DUKE			
60 , A60 , B60	TIO-541	CH48104-1	CFO-101-1
GULFSTREAM AMERICAN (SINGLE ENGINE MODELS)			
AA-1 , 1A , 1B , 1B TRAINER TR	2 / LYC. O-235	CH48110-1	CFO-100-1
A1C LYNX , T-CAT	LYC. O-235-L		
AA-5 TRAVELER	LYC. O-320-E		
AA-5A CHEETAH			
AA-5B TIGER	LYC. O-360-A4K		
COUGAR	2 / LYC. O-320-D		
MALIBU			
PA-46-301P	CONT. TSIO-520-BE	CH48109-1	--
MALIBU MIRAGE			
PA-46-350-P	LYC. TIO-540-AE2A	CH48103-1	--
MAULE			
M5-180-C , MX7-180	O-360-C , -C1F	CH48110-1	--
M5-210C	IO-360D , -L2A	--	
M5-210TC	TO-360-C1A6D	CH48103-1	
M5-235C , M6-235 , M7-235	O-540-J1A5D		
MX-7-235	O-540-W1A5D		
MOONEY AIRCRAFT			
M20A , B , MARK21	O-360	CH48110-1	--
M20D MASTER			CFO-100-1
M20C RANGER			--
M20G STATESMAN			CFO-100-1
MOONEY AIRCRAFT			
M20E CHAPARRAL	IO-360 , -L2A	CH48110-1	CFO-100-1
M20F EXECUTIVE			
M20J-201	IO-360-A3B6D , -L2A	CH48103-1	--
M20K-231	TSIO-360-G , LB	CH48108-1	
M20M-TLS	TIO-540-AFIA , B	CH48110-1	
M20R	IO-550	CH48108-1	
M22 MUSTANG	TIO-541	CH48110-1	CFO-100-1
M20K-252 TSE	TSIO-360-MB1	CH48108-1	--
MUSKETEER			
SPORT III	O-320	CH48110-1	CFO-100-1
23			
A23-19 , 19A , B19 SPORT			
A23 , 23 , A23A	IO-346	--	
A23 , A23A	IO-346A	CH48109-1	--
B23 , C23 SUNDOWNER	O-360	CH48110-1	CFO-100-1
B23	O-360A4JD	CH48103-1	
NAVAJO			
PA-31 “300”	IO-540	CH48110-1	CFO-100-1
PA-31 “310” TURBO	TIO-540		
PA-31 “325”	IO-540-F2BD	CH48103-1	
	LTIO-540-F2BD		
PA-31 “350” CHIEFTAIN	TIO-540-J2BD		
	LTIO-540-J2BD		

*These filters are equipped with an internal bypass valve. They can be used on any TCM engine equipped with or without a bypass valve in the oil filter engine adapter.

APPLICATION DATA

AIRCRAFT MODELS	Engine Model	Champion Spin-On Filter	CHAMPION ELEMENT
NAVAJO			
PA-31P “425”	TIGO-541	CH48104-1	CFO-101-1
PA-31P “350” MOJAVE	TIO / LIO-540-V2AD		--
PAWNEE			
PA-25 “150”	O-320	CH48110-1	CFO-100-1
A25 “260”	O-540		
PA-36 BRAVE	6-285B	CH48109-1	--
PA-36-375 BRAVE	IO-720-D1C	CH48110-1	CFO-100-1
PA-36-400 BRAVE	IO-720D1CD	CH48104-1	CFO-101-1
PIPER AEROSTAR			
PA-60-600 , -600A	IO-540-G , -K	CH48110-1	CFO-100-1
PA-60-604 , -601B	IO-540-P , -S		
PA-60-601P	IO-540-S		
PA-60-602P	IO-540-AA1A5		
PIPER CUB			
PA-18 “150”	O-320	CH48110-1	CFO-100-1
QUEEN AIR			
65 , 70	O-360	CH48111-1	CFO-100-1
80 , 88 , B60	IO-360 , L2A		
SEMINOLE			
PA-44-180	O-360-E1AD	CH48103-1 *	CFO-100-1
PA-440-180T	TO-360-E1A6D		
	LTO-360-E1A6D		
SENECA			
PA-34	IO-360C	CH48110-1	CFO-100-1
	LIO-360C		
PA-34	IO-360-C1E6D	CH48103-1	
	LIO-360-C1E6D		
SENECA II	LTSIO-360-E	CH48108-1	--
	TSIO-360-KB		
SENECA III	TSIO-360-KB		
PA-34-220T	LTSIO-360-KB		
SIERRA			
24 , A-24 , A24R , B-24R , C24R	IO-360 , L2A	CH48110-1	CFO-100-1
SKIPPER			
77	O-235-L2C	CH48110-1	--
TOMAHAWK			
TRAINER PA-38-112	O-235-L2C	CH48103-1 *	CFO-100-1
TRAVEL AIR			
95 , B95	O-360	CH48110-1	CFO-100-1
B95A , D95A , E95	IO-360 , L2A		
TRI-PACER			
PA-22 “150”	O-320	CH48110-1	CFO-100-1
PA-22 “160”			
TWIN COMMANCHE			
PA-30 “160” TURBO	IO-320	CH48110-1	CFO-100-1
PA-39 “160”	IO-320		
	LIO-320		
PA-39 “160” TURBO	IO-320		
	LIO-320		



TEMPEST OIL FILTERS ALSO AVAILABLE!

253-848-9349
SpencerAircraft.com

Spencer Aircraft provides the information in this catalog for its customers as a ***reference only*** and it is not intended for design or guarantee of accuracy. Though it is our policy to ship all orders in a timely manner, Spencer Aircraft cannot guarantee that all items will be in stock at all times.

TEMPEST OIL FILTERS



POPULAR SPIN-ON OIL FILTERS

CHAMPION P/N	OVERALL DIMENSIONS (NOMINAL)		THREAD (SAE)	INSTALLATION TORQUE
	HEIGHT	DIAMETER		
AA48103-2	4-3/8	3-3/4	13/16-16-UNS-2B	16 - 18 FT LBS
AA48104	6-3/16			
AA48108-2	4-3/8		3/4-16-UNF-2B	
AA48109	6-3/16			
AA48110-2	4-3/8			
AA48111	6-3/16			

Total Manufacturing Control – Tempest Spin EZ® filters are the only aviation oil filters made in a state of the art aviation oil filter plant built solely for, and dedicated too, the manufacture of aviation oil filters. Total process control helps ensure the highest standard of quality.

Features and Benefits;

Magnetic Filtration System – The Tempest Spin EZ filter has more media area (311 square inches) than any other aviation oil filter. An internal magnet, designed to attract fine steel particles too small too small be caught by the filter media that can be harmful to the engine, effectively increases the filtration performance of the filter.

Six-pack Packaging – Tempest filters are available in popular “Six-Packs” as well as the traditional case of twelve. Six-packs are economical, convenient, and easy to handle.

Improved Nut Welds – Nut welds are so strong that the can will distort without breaking the welds! During production testing nuts are actually ripped away from the can – the base metal must fail, the welds must not. Using Tempest Original filters means no more frustration with installation nuts falling off.

Improved By-Pass Valve for Continental® Engines – Meets TCM by-pass specification of 12-14 psi, reducing risk of premature bypass that can result in unfiltered oil flowing to your engine.

PC Housing (Patent Pending) – the only filter to incorporate a housing for the by-pass valve to prevent the restriction of the oil outlet should a failure of the by-pass valve occur.

Burst strength of 600 psi – Significant improvements to the roll seam process used on the bottom of the can substantially improved the design burst strength of the Tempest Spin EZ oil filter to over 600 pounds per square inch, exceeding the ARP 1400 standard by 50 percent. Extra strength gives added assurance that Tempest oil filters are made to withstand the harshest operating conditions.

Full Pleat Media – The resin-impregnated, cellulosic, full pleat media is designed for uniform flow and collapse resistance. 312 square inches is the most in aviation oil filters.

Spin EZ® Solid Lubricant – Tempest Spin EZ oil filter’s proprietary solid lubricant allows for easy removal of the filter. Unlike oil, grease or DC4 compound that leave the filter seemingly “bonded” to the engines mount pad, making it nearly impossible to remove, our Spin EZ solid lubricant wont extrude or squirt out from under the seal; allowing for removal without a fight.

APPLICATION DATA

AIRCRAFT MODELS	Engine Model	Champion Spin-On Filter
AEROSPATIABLE (SOCATA)		
TB9 TAMPICO	O-320-D2A	AA48110-2
TB10 TOBAGO	O-360-A1AD	
TB20 TRINIDAD	IO-540-C4D5D	AA48103-2
TB21 TRINIDAD TC	TIO-540-AB1AD	
TC30	AEIO-540-L1B5D	
AEROSTAR (SEE PIPER)		
AMERICAN GENERAL AIRCRAFT		
AG5B TIGER	O-360-A4K	AA48110
APACHE		
PA-23 “150”	O-320	AA48110-2
PA-23 “160”		
PA-23 “235”	ITIO-541-E	
AZTEC		
PA-23 “250”	O-540	AA48110-2
“C” PA-23	IO-540	
PA-23 TURBO “250” “C” , “D” , “E” , “F”		
PA-23 TURBO “250”	TIO-540	
ARROW		
PA-28R “180”	IO-360 , L2A	AA48110-2
PA-28R “180”	IO-360-C1CD	AA48103-2
PA-28R “200” ARROW II	IO-360 , L2A	AA48110-2
PA-284 “200” TURBO ARROW III	TSIO-360	AA48108-2
PA-28-R-201T	TSIO-360-F1	
BEECH BARON		
C55 , D55 , E55 , 58	IO-520C	AA48109
56TC , A56TC	ITIO-541-E	AA48104
BARON 58P , 58TC	TSIO-520-L , -W , -B	AA48108-2
BARON 58C , 550	IO-550	AA48109

APPLICATION DATA

AIRCRAFT MODELS	Engine Model	Champion Spin-On Filter
BEECH BONANZA		
E33A , F33A , F33B , F33C	IO-520B	AA48109
G-33	IO-470N	AA48108-2
H-35	O-470	
J , K , M-35	IO-470-C	
N , P-35	IO-470-N	
S35 , V35 , V35A , V35B	IO-520	AA48109
S35	IO-520B	
V35TC , V35A-TC , V35B-TC	TSIO-520	
V35TC , V35A-TC , -V35B-TC	TSIO-520D	
V35 , V35A , V35B	IO-520B	
36 , A36		
A36TC , B36TC	TSIO-520-UB	
B36-550	IO-550	
BELLANCA		
17-31A , 17-31ATC	IO-540-K	AA48110-2
17-31A VIKING		
17-31ATC TURBO	TIO-540	
CESSNA		
150 A THRU M	O-200	AA48108-2
F150 F THRU M		
A150L		
FA150		
152	O-235-L2C , H2C	AA48110-2
C-172		
172 A THRU H	O-300	AA48108-2
172 I THRU M	O-320	AA48110
172N	O-320-H2AD	AA48103-2
172P	O-320-D2J	AA48111
F172 D THRU H	O-300	AA48110

All Cessna aircraft modified under Cessna Service bulletin SEB-93-1 or MEB-93-1 require **Tempest Oil Filter AA48108**. The AA48109 may be used if clearance permits installation.

Spencer Aircraft provides the information in this catalog for its customers as a ***reference only*** and it is not intended for design or guarantee of accuracy. Though it is our policy to ship all orders in a timely manner, Spencer Aircraft cannot guarantee that all items will be in stock at all times.

TEMPEST OIL FILTERS

APPLICATION DATA

AIRCRAFT MODELS	Engine Model	Tempest Spin-On Filter
CESSNA		
FR172E THRU K	IO-360	AA48108-2
R172K	IO-360-K	
172R	IO-360-L2A	AA48110-2
172RG	O-360-F1A6	
172S	IO-360-L2A	
177	O-320	
177A , B	O-360-A1F6D	AA48103-2
177RG	IO-360-A1B6D	
180 A THRU J	O-470	AA48108-2
180Q	O-470-U ++	
180 S/N 53087 & UP		
182		
182 A THRU P	O-470	AA48108-2
182Q , R	O-470-U ++	
182S	IO-540-AB1A5	AA48110-2
A182 K THRU N	O-470	AA48108-2
182 S/N 67042 & UP	O-470-U ++	
F182 S/N 00130 & UP		
R182	O-540-J3C5D	AA48103-2
T182		
TR182 , FTR182		
185 A THRU D	IO-470 , IO-520	AA48108-2
A185E , F		
185 S/N 03852 & UP	IO-520	
188	O-470 , IO-520	
188 S/N 03474 & UP	IO-520D	AA48109
T188 S/N 03474 & UP	TSIO-520	
205A	IO-470	AA48108-2
C-206	IO-540	AA48110
206 A THRU G	IO-520	AA48108-2
206H	IO-540-AC1A5	AA48110-2
206 S/N 05030 & UP	IO-520	AA48109
206 S/N 05030 & UP	TSIO-520	
U206	IO-520	AA48108-2
T-260H	TIO-540-AJ1A	AA48110-2
TU206	TSIO-520	AA48108-2
P206	IO-520	
TP-206	TSIO-520	
207	IO-520	
207 S/N 05227 & UP		AA48109
T207 S/N 05227 &UP	TSIO-520	
T207		AA48108-2
210	IO-470 , IO-520	
210 S/N 63372-63375 & UP	IO-520	AA48109
T210 S/N 63372-63375 & UP	TSIO-520	AA48108
P210 S/N 278 & UP		AA48108-2
T210 , P210 S/N 1-277	TSIO-520 ++	
T303	LTSIO-520-AE	AA48109
	TSIO-520-AE	
310 C THRU Q	IO-470	AA48108-2
310R	IO-520-M	
T310P , Q , R	TSIO-520-B	
320-A	TSIO-470	AA48104
320-B , C		AA48109
320-D , E , F	TSIO-520-B	AA48108-2
335	TSIO-520-EB	AA48109
336	IO-360	AA48108-2
337	IO-360	
P337 , P337H	TSIO-360	

All Cessna aircraft modified under Cessna Service bulletin SEB-93-1 or MEB-93-1 require **Tempest Oil Filter AA48108**. The AA48109 may be used if clearance permits installation.

APPLICATION DATA

AIRCRAFT MODELS	Engine Model	Tempest Spin-On Filter
CESSNA		
T337H	TSIO-360-H	AA48108-2
340	TSIO-520-K	
340A	TSIO-520-N , -NB	AA48109
401/402	TSIO-520-E	AA48108-2
402C	TSIO520-VB	AA48109
404	GTSIO-520-M	AA48111
411 S/N 000 THRU 0126	GTSIO-520-C	AA48104
411 S/N 0127 & UP		AA48111
414 , 414A	TSIO-520-J , -N	AA48108-2
421A , B	GTSIO-520-D , -H	AA48111
421C S/N 1017 THRU 1404	-L , N , ++	
CHEROKEE CADET		
PA-28-140	O-320	AA48110-2
PA-28-150		
PA-28-160 , 161		
PA-28-180	O-360	
PA-28-180 , 181	O-360-A4M	
PA-28-235	O-540	
PA-28-151	O-320	
CHEROKEE SIX		
PA-32-260	O-540	AA48110-2
PA-32-300	IO-540	
PA-32R-300	IO-540-K1AD	AA48103-2
	IO-540-S1AD	
PA-32RT-300T		
PA-32-301	IO-540-K1G5D	
	TIO-540-S1AD	
PA-32R-301	IO-540-K1G5D	
	TIO-540-S1AD	
CIRRUS AIRCRAFT		
SRV , SR20	IO-360ES	AA48108-2
SR22	IO-550N	AA48109
SR22T	TSIO-550-K	
COLUMBIA / LANCAIR		
COLUMBIA 300 , 350	IO-550N	AA48109
COLUMBIA 400	TSIO-550	
COMANCHE		
PA-24-180	O-360	AA48110-2
PA-24-250	O-540 OR IO-540	
PA-24B , PA-24C-260		
PA-24-260 TURBO	IO-540	
COMMANDER		
112 , 112A	IO-360-C , -L2A	AA48110-2
112TC	TO-360-C1A6B	
114	IO-540-T4A5D	
500B , 500U	IO-540	
700	TIO-540-R2AD	AA48103-2
DAKOTA		
PA-28-235	O-540-J3A5D	AA48103-2
PA-28-201T	TSIO-360-FB	AA48108-2
DEBONAIR / BONANZA		
C33A , E33A , F33C	IO-520B	AA48109
DIAMOND AIRCRAFT		
DA20-1C	IO-240	AA48108-2
DA40-180	IO-360	AA48110-2
DUCHESS		
76	LO-360-A1G6D & O-360-A1G6D	AA48103-2

253-848-9349
SpencerAircraft.com

Spencer Aircraft provides the information in this catalog for its customers as a ***reference only*** and it is not intended for design or guarantee of accuracy. Though it is our policy to ship all orders in a timely manner, Spencer Aircraft cannot guarantee that all items will be in stock at all times.

TEMPEST OIL FILTERS

APPLICATION DATA

AIRCRAFT MODELS	Engine Model	Tempest Spin-On Filter
DUKE		
60 , A60 , B60	TIO-541	AA48104
GULFSTREAM AMERICAN (SINGLE ENGINE MODELS)		
AA-1 , 1A , 1B , 1B TRAINER TR	2 / LYC. O-235	AA48110-2
A1C LYNX , T-CAT	LYC. O-235-L	
AA-5 TRAVELER	LYC. O-320-E	
AA-5A CHEETAH		
AA-5B TIGER	LYC. O-360-A4K	
COUGAR	2 / LYC. O-320-D	
HELIO AIRCRAFT		
HELIO 700	TIO-540-J2BD	AA48103-2
MALIBU		
PA-46-301P	CONT. TSIO-520-BE	AA48109
MALIBU MIRAGE		
PA-46-350-P	LYC. TIO-540-AE2A	AA48103-2
MAULE		
M5-180-C , MX7-180	O-360-C , -C1F	AA48110-2
M5-210C	IO-360D , -L2A	--
M5-210TC	TO-360-C1A6D	AA48103-2
M5-235C , M6-235 , M7-235	O-540-J1A5D	
MX-7-235	O-540-W1A5D	
MOONEY AIRCRAFT		
M20	O-320	AA48110-2
M20A , B , MARK21	O-360	
M20D MASTER		
M20C RANGER		
M20G STATESMAN		
M20E CHAPARRAL	IO-360 , -L2A	
M20F EXECUTIVE		
M20J-201	IO-360-A3B6D , -L2A	AA48103-2
M20K-231	TSIO-360-G , LB	AA48108-2
M20M-TLS	TIO-540-AFIA , B	AA48110-2
M20R	IO-550	AA48108-2
M22 MUSTANG	TIO-541	AA48110-2
M20K-252 TSE	TSIO-360-MB1	AA48108-2
MUSKETEER		
SPORT III	O-320	AA48110
23		AA48110
A23-19 , 19A , B19 SPORT		AA48110-2
A23 , A23A	IO-346A	AA48109
B23 , C23 SUNDOWNER	O-360	AA48110-2
B23	O-360A4JD	AA48103
NAVAJO		
PA-31-300	IO-540	AA48110-2
PA-31-310 TURBO	TIO-540	
PA-31-325	IO-540-F2BD	AA48103-2
	LTIO-540-F2BD	
PA-31-350 CHIEFTAIN	TIO-540-J2BD	
	LTIO-540-J2BD	
PA-31P-425	TIGO-541	AA48104
PA-31P-350 MOJAVE	TIO-540-V2AD	
	TLIO-540-V2AD	

APPLICATION DATA

AIRCRAFT MODELS	Engine Model	Tempest Spin-On Filter
PAWNEE		
PA-25 “150”	O-320	AA48110-2
A25 “260”	O-540	
PA-36 BRAVE	6-285B	AA48109-2
PA-36-375 BRAVE	IO-720-D1C	AA48110-2
PA-36-400 BRAVE	IO-720D1CD	AA48104
PIPER AEROSTAR		
PA-60-600 , -600A	IO-540-G , -K	AA48110-2
PA-60-604 , -601B	IO-540-P , -S	
PA-60-601P	IO-540-S	
PA-60-602P	IO-540-AA1A5	
PIPER CUB		
PA-18 “150”	O-320	AA48110-2
QUEEN AIR		
65 , 70	O-360	AA48111
80 , 88 , B60	IO-360 , L2A	
RILEY CONVERSION		
310	TIO-540-N2BD	AA48103-2
	LTIO-540-N2BD	
SEMINOLE		
PA-44-180	O-360-E1AD	AA48103-2
PA-440-180T	TO-360-E1A6D	
	LTO-360-E1A6D	
SENECA		
PA-34	IO-360C	AA48110-2
	LIO-360C	
PA-34	IO-360-C1E6D	AA48103
	LIO-360-C1E6D	
SENECA II	LTSIO-360-E	AA48108-2
	TSIO-360-KB	
SENECA III PA-34-220T	TSIO-360-KB	
	LTSIO-360-KB	
SIERRA		
24 , A-24 , A24R , B-24R , C24R	IO-360 , L2A	AA48110-2
SKIPPER		
77	O-235-L2C	AA48110-2
TOMAHAWK		
TRAINER PA-38-112	O-235-L2C	AA48103-2
TRAVEL AIR		
95 , B95	O-360	AA48110-2
B95A , D95A , E95	IO-360 , L2A	
TRI-PACER		
PA-22 “150”	O-320	AA48110-2
PA-22 “160”		
TWIN COMMANCHE		
PA-30 “160” TURBO	IO-320	AA48110-2
PA-39 “160”	IO-320	
	LIO-320	
PA-39 “160” TURBO	IO-320	
	LIO-320	



CHAMPION OIL FILTERS ALSO AVAILABLE!

Spencer Aircraft provides the information in this catalog for its customers as a ***reference only*** and it is not intended for design or guarantee of accuracy. Though it is our policy to ship all orders in a timely manner, Spencer Aircraft cannot guarantee that all items will be in stock at all times.

AeroShell Distributor

AEROSHELL PRODUCT	US SPECS	BRITISH SPECS	NATO CODE	JOINT SERVICE DESIGNATION	PRODUCT & APPLICATION	REMARKS
PISTON ENGINE OILS						
65	SAE J-1966 GRADE 30	--	O-113 (obsolete)	--	Straight Mineral (BREAK-IN)	Available in the USA only
80	SAE J-1966 GRADE 40		O-115 (obsolete)	OM-170		
100	SAE J-1966 GRADE 50		O-117 (obsolete)	OM-270		
120	SAE J-1966 GRADE 60		O-128 (obsolete)	OM-370		
W80	SAE J-1899 GRADE 40		O-123 (obsolete)	OMD-160	Ashless Dispersant Mineral Single-Grade	
W100	SAE J-1899 GRADE 50		O-125 (obsolete)	OMD-250		
W80 PLUS	SAE J-1899 GRADE 40	--	--	--	Ashless Dispersant Premium Mineral Single-Grade	Approved for LYC. SB 446E & FAA AD 80-04-03R2
W100 PLUS	SAE J-1899 GRADE 50	--	--	--		
W120	SAE J-1899 GRADE 60		O-128 (obsolete)	OMD-370	Ashless Dispersant Mineral Single-Grade	
15W50	SAE J-1899 MULTIGRADE		O-162 (obsolete)	OMD-162	Ashless Dispersant Semi-Synthetic Multigrade	Approved for LYC. SB 446E & FAA AD 80-04-03R2
SPORT PLUS 4	ROTAX RON 424	--	--	--	Dedicated Four-Stroke Light Sport & Microlight Recommended by Rotax	Fully approved for Rotax RON 424; All 912 & 914 Do not in engines designed for SAE J-1899 or 1966

TURBINE ENGINE OILS					
2	MIL-PRF-6081E GRADE 1010	--	O-133	OM-10 (OBSOLETE)	Mineral $2MM^2$ /s fuel system inhibiting oil
3 ASF 1	--	DEF STAN 91-99	O-135	OM-11	Mineral $2MM^2$ /s fuel system inhibiting oil equiv. to & replaces ASF 1
308	MIL-PRF-7808L GRADE 3	--	O-148	OX-9	Synthetic Ester
390	--	DEF STAN 91-94	--	OX-7	Synthetic Diester
500	MIL-PRF-23699G GRADE STD SAE AS5780B GRADE SPC	DEF STAN 91-101 GRADE OX-27	O-156	OX-27	Standard Grade, Synthetic Ester, 5 cSt viscosity
555	DOD-PRF-85734A	DEF STAN 91-100	O-160	OX-26	Synthetic Ester for Helicopters, 5 cSt viscosity. High load-carrying ability
560	MIL-PRF-23699G GRADE HTS SAE AS5780B GRADE SPC		O-154	OX-27	High thermal stability synthetic ester, 5 cSt viscosity
750	--	DEF STAN 91-98	O-149	OX-38	Synthetic Ester, 7.5 cSt viscosity

253-848-9349
SpencerAircraft.com

Spencer Aircraft provides the information in this catalog for its customers as a ***reference only*** and it is not intended for design or guarantee of accuracy. Though it is our policy to ship all orders in a timely manner, Spencer Aircraft cannot guarantee that all items will be in stock at all times.

AEROSHELL PRODUCT	US SPECS	BRITISH SPECS	NATO CODE	JOINT SERVICE DESIGNATION	PRODUCT & APPLICATION	REMARKS
AVIATION GREASES						
5	MIL-G-3545C (obsolete)	DTD.878A (obsolete) *	G-359 (obsolete)	XG-277 (obsolete)	High Temp.	DTD transferred to DEF STAN 91-52, NATO XG-293
6	MIL-PRF-24139A MIL-G-7711A (obsolete)	DEF STAN 91-12 (obsolete)	G-382	XG-271 (obsolete)	General Purpose	(obsolete) Move to 33
7	MIL-PRF-23827C (TYPE II)	--	--	--	Multipurpose synthetic	--
14	MIL-G-25537C	DEF STAN 91-51	G-366	XG-284	Multipurpose mineral Helicopter	--
22	MIL-PRF-81322G NLGI GRADE 2 DOD-G-24508A	DEF STAN 91-52	G-395	XG-293	General purpose, versatile, synthetic hydrocarbon	--
33	MIL-PRF-23827C (TYPE I) SAE AMS 3052 **	DEF STAN 91-53	G-354	XG-287	Universal lithium complex, with synthetic base	Approved by: Boeing BMS 3-33. Airbus AIMS 09-06-002
64 (Formally 33MS)	MIL-G-61164D	DEF STAN 91-57	G-353	XG-276	Extreme pressure, synthetic hydrocarbon lithium complex	Possesses extreme-pressure characteristics provided by 5% Molybdenum Disulphide
58	SAE AMS 3058 **	--	--	--	New lithium complex for wheel bearings	Will become civil industry standard

HYDRAULIC FLUIDS						
31	MIL-PRF-83282D	--	H-537	OX-19	Super-clean Fire-resistant Synthetic hydrocarbon	PAO base
41	MIL-PRF-5606H	DEF STAN 91-48	H-515	OM-15	Super-clean Mineral	--
41	MIL-H-5606A * (obsolete)	DEF STAN 91-48 * (obsolete)	H-520	OM-18	Mineral Low temp. characteristics	Only in USA
61	MIL-PRF-46170E (TYPE I)	--	H-544	--	Super-clean Preservative Synthetic hydrocarbon	Type I is undyed Type II is dyed red
71	MIL-PRF-6083G	DEF STAN 80-142	C-635	PX-26 *	Super-clean Preservative Mineral	--

SPECIALIST FLUIDS						
2XN	MIL-C-6529C TYPE II	DTD.900/4913A (obsolete)	C-608	ZX-21 (obsolete)	Preservative Mineral concentrate	Ashless
3	MIL-PRF-7870E	DEF STAN 91-47	O-142	OM-12	General purpose Low temp. Mineral lubricant	-
12	MIL-PRF-6085E	DEF STAN 91-49 *	O-147	OX-14 *	Low temp. Synthetic Ester Instrument lubricant	--
COMPOUND 07	--	DTD.406B	S-745	AL-5	De-icing for in-flight & on runway	--
602	MIL-PRF-87252D	--	S-1748	--	Synthetic cooling fluid	--



AEROSHELL

Spencer Aircraft provides the information in this catalog for its customers as a ***reference only*** and it is not intended for design or guarantee of accuracy. Though it is our policy to ship all orders in a timely manner, Spencer Aircraft cannot guarantee that all items will be in stock at all times.

OIL / PHILLIPS



PHILLIPS 66 AVIATION



PHILLIPS PRODUCT	SAE SPECS	MIL SPECS	GRADE	APPLICATIONS	FEATURES	REMARKS
PISTON ENGINE OILS						
20W-50 TYPE M	SAE STANDARD J1966	MIL-L-6082 (obsolete)	20W-50	-Piston engines where the operator prefers a non-dispersant engine oil -"Break-in" oil for newly overhauled engines	-Easier starting and oil circulation -High-film strength -Reduces cylinder glazing during break-in	QPL: D07L1-20W-50 (Type M)
ANTI-RUST	SAE STANDARD J1966	MIL-C-6529C MIL-L-6082E (obsolete)	20W-50	-Engine preservative oil -Limited-time "break-in" oil	Excellent rust and corrosion protection	Protect aicraft piston engines against rust and corrosion during extended periods of inactivity
100AD TYPE A	SAE STANDARD J1899	MIL-L-22851D (obsolete)	100AD SAE 50	Opposed piston engines that require SAE 50 or Commercial Grade 100	-Detergents -High-film strength -Protects against rust & corrosion	Avco Lycoming: 301G Pratt & Whitney: 1183 Rev. U Teledyne Continental: MHS-24B QPL: D07L1-50
120AD TYPE A	SAE STANDARD J1899	MIL-L-22851D (obsolete)	120AD SAE 60	Radial piston engines that require SAE 60 or Commercial Grade 120	-Detergents -High-film strength -Protects against rust & corrosion	Avco Lycoming: 301G Pratt & Whitney: 1183 Rev. U Teledyne Continental: MHS-24B QPL: D07L1-60
100AW	SAE STANDARD J1899	MIL-L-22851D (obsolete)	50	Opposed piston aircraft engines, especially where cam lifter wear Is a concern	-Ashless dispersant -Pre-blended with Lycoming-approved antiwear additive -High-film strength -High viscosity index -Protects against rust & corrosion -Same high-quality base oils as Phillips X/C	Avco Lycoming: 301G Pratt & Whitney: 1183 Rev. U Teledyne Continental: MHS-24B QPL: D07L2-50
20W50	SAE STANDARD J1899	MIL-D22851D (obsolete)	20W-50	AW 20W-50 Aviation Oil is recommended for use in opposed piston engines. It can replace Commercial Grade 65, 80 or 100 single-grade engine oils with no sacrifice in performance.	-Detergents -High-film strength -Protects against rust & corrosion -Reduces oil consumption -Year-round use -Cleaner & quicker break-in	Avco Lycoming: 301G Pratt & Whitney: 1183 Rev. U Teledyne Continental: MHS-24B QPL: D07L1-20W-50
20W50 VICTORY	SAE STANDARD J1899	MIL-D22851D (obsolete)	20W-50	Victory AW 20W-50 Aviation Oil is recommended for use in opposed piston engines. It can replace Commercial Grade 65, 80 or 100 single-grade engine oils with no sacrifice in performance.	-Detergents -Pre-blended with Lycoming-approved antiwear additive -High-film strength -Protects against rust & corrosion -Reduces oil consumption -Year-round use -Cleaner & quicker break-in	Avco Lycoming: 1014 Pratt & Whitney: 1183 Rev. U Teledyne Continental: MHS-24B
25W60	SAE STANDARD J1899	MIL-D22851D (obsolete)	25W-60	Radial piston engines and other aviation piston engines designed to run on heavier-grade oils, such as Commercial Grade 120	-Detergents -High-film strength -Protects against rust & corrosion -Reduces oil consumption -Year-round use -Cleaner & quicker break-in	Avco Lycoming: 301G Pratt & Whitney: 1183 Rev. U Teledyne Continental: MHS-24B QPL: D07L1-25W-60
10W-40 DIESEL	--	--	10W-40	-Compression ignition piston engines -Air Cooled and liquid cooled -2-stroke and 4-stroke combustion cycle	-Synthetic basestocks for strong protection against oxidation -Dispersants -Detergents -Robust antiwear package -High-film strength -High viscosity index -Robust foam resistance -Protects against rust & corrosion	Victory Diesel is recommended exclusively for use in: Continental Aerospace Technologies CD-200 engine DeltaHawk's engine product line May be used in other compression ignition aviation engines after consulting with the engine manufacturer. **SHOULD NOT BE USED IN ENGINES USING 100LL FUEL**
SMOKE OIL	--	--	ISO 10/15	-Smoke systems that require a paraffin based light viscosity oil -Piston powered smoke system -Turbine powered smoke system	-Paraffin based -Easy vaporization due to low viscosity -Good low temp. properties	The smoke choice for the Phillips 66 Aerostarts Aerobatic team.

Spencer Aircraft provides the information in this catalog for its customers as a ***reference only*** and it is not intended for design or guarantee of accuracy. Though it is our policy to ship all orders in a timely manner, Spencer Aircraft cannot guarantee that all items will be in stock at all times.

LUBRICANTS & SILICONES

LPS

1	00116	Greaseless Lubricant
2	00216	Heavy Duty Lubricant
3	00316	Premier Rust Prohibitor
A-151	04320	Solvent Degreaser
CFC Free	03116	Contact Cleaner
U-10	06220	Brake Cleaner
Towels	09200	Hand Towels





AvBlend

Prevent Rust, Reduce Premature Wear, Prevents Valves From Sticking, Prevent Carbon and Deposit Build-up, Reduce Dry Start Damage, Restore Peak Combustion Performance.



CamGuard: Aircraft

Contains powerful multi-metal corrosion inhibitors that prevent rust and corrosion in infrequently used engines. Infrequent engine use can lead to rust pits forming on cam and lifter surfaces. This pitting can result in catastrophic spalling wear requiring a premature engine overhaul.

Use 1.6oz per quart of oil. Add at each oil change.



CamGuard: Marine

Prevents Corrosion – CamGuard contains powerful multi-metal corrosion inhibitors that prevent rust and corrosion. This is essential for all boat engines subject to sporadic or seasonal use and is highly recommended when undergoing winter storage.

Each 8oz bottle will treat one oil change.* Add at each oil change.



CamGuard: Automotive

Delivers uncompromised performance using the most advanced additive technology available to dramatically reduce friction and wear, decrease deposit formation and prevent corrosion when used in today's commercial automotive oils.

Each 8oz bottle will treat one oil change.* Add at each oil change.



CamGuard: HD Diesel

Blend of high performance additives that fortify Heavy-Duty (HD) Diesel oils to provide the utmost in engine protection. Commercial HD oil formulations are at best a compromise due to cost, new oil specification delays and government regulations. Cost pressures lead to reduced additive concentrations as well as the inability to utilize the latest additive technology, both of which lead to less than optimum performance.

Add 1.6oz per quart at each oil change.

SHELL
AeroShell®

AeroShell

15W-50 Premium
Sport Plus 4 Rotax
W-80 Plus Ashless SAE 40
W-80 DET Ashless SAE 40
R-80 Mineral SAE 40
W-100 Plus Ashless SAE 50
W-100 DET Ashless SAE
W-100 Non-DET SAE 50

AeroShell Grease

5
6
7
14
22
33
58
64

AeroShell Fluids

Fluid 4
Fluid 12
Fluid 31
Fluid 41

Available in quarts, cases or drums.

Ask about special case pricing!

PHILLIPS 66

Phillips 66

W20-50 Mineral
X/C SAE 20W-50
X/C Aviation Hydraulic Fluid

Available in quarts, cases or drums.

Ask about special case pricing!

Spencer Aircraft provides the information in this catalog for its customers as a ***reference only*** and it is not intended for design or guarantee of accuracy. Though it is our policy to ship all orders in a timely manner, Spencer Aircraft cannot guarantee that all items will be in stock at all times.



1001 Alodine

Brush on chemical to condition aluminum for a clean finish and corrosion resistance. Maintains the original aluminum appearance.
1 Quart (6 per case)
1 Gallon (4 per case)



1201 Alodine

Brush on chemical to condition aluminum for paint. Improves paint adhesion and corrosion resistance. Meets MIL-C-5541B, Class 1A Method B
1 Quart (6 per case)
1 Gallon (4 per case)



33 Alumiprep

Brush on chemical to clean, brighten and remove oxidation from aluminum. Prepares aluminum for painting and welding.
1 Quart (6 per case)
1 Gallon (4 per case)



Methyl Ethyl Ketone

Very active solvent with similar characteristics to Acetone, but is slower drying than Acetone. Primarily used with specialty Epoxies and resins.
1 Quart (6 per case)
1 Gallon (4 per case)



Acetone

Used for thinning fiberglass resin and adhesives, dissolving two-part epoxies, cleaning tools used for epoxies and lacquers.
1 Quart (6 per case)
1 Gallon (4 per case)



Toluol

Recochem Toluol (Toluene) speeds curing of oil based paints and lacquers. Recochem Toluol toluene also acts as a general purpose solvent and degreaser that removes adhesives and inks.
1 Quart (6 per case)
1 Gallon (4 per case)



PreKote

A simple procedure that replaces the use of traditional chromate conversion coatings and the need for acid etches, solvent washes and other toxic processes.
1 Quart (6 per case)
1 Gallon (4 per case)



Paint Removers

Paint Remover is available in many different brands. Call to see if we have the brand you need.
1 Quart (6 per case)
1 Gallon (4 per case)



Mineral Spirits

An extremely high-grade solvent with virtually no impurities. Excellent for thinning paints. No objectionable odor.
1 Quart (6 per case)
1 Gallon (4 per case)



GILL BATTERY ACID

Battery grade sulfuric acid with a specific gravity of 1.285. Self-contained dispenser tube. Packaged in sturdy cardboard container.
2 Quart
3 Quart

Don't Forget Your Safety Gear!

Spencer Aircraft offers the finest in safety gear to help with your solvents & primer.



Spencer Aircraft provides the information in this catalog for its customers as a ***reference only*** and it is not intended for design or guarantee of accuracy. Though it is our policy to ship all orders in a timely manner, Spencer Aircraft cannot guarantee that all items will be in stock at all times.



NEVR-DULL POLISH

Chemically impregnated cotton wadding. Acts as a solvent and a mechanical cleaner. Removes corrosion, carbon exhaust marks, grit, wax, tar, rain marks and any petroleum products.
One operation - no severe rubbing, no waxing necessary. Leaves a protective film on all metal surfaces.
2 Pound can (12 per case)



Clear View
Plastic Cleaner
Protectant & Polish



Xtreme Clean (general purpose cleaner / degreaser)



Prist
Acrylic, Plastic &
Glass Cleaner



N'Viro Solve
(bio-based aircraft belly cleaner / degreaser)



RejeX Ultra Thin Polymer Coating



CorrosionX Trigger Spray



CorrosionX Aviation



CorrosionX Heavy Duty



Bugslide
Cleaner Polish & Bug Removal



Aero Shine Speed Wax and Dry Wash Protectant



Aero Glide Polymer - Infused Clay Bar



Pro Wash RX (pH neutral soap)

If you don't see it, call us! 253-848-9349

Spencer Aircraft provides the information in this catalog for its customers as a ***reference only*** and it is not intended for design or guarantee of accuracy. Though it is our policy to ship all orders in a timely manner, Spencer Aircraft cannot guarantee that all items will be in stock at all times.

CLEVELAND STANDARD ORGANIC BRAKE LININGS

Aircraft Make & Model	Old Cleveland P/N	# Reg	New Cleveland P/N
AEROTEK - Pitts S-1, S-2A	66-2	2	66-106
BEECH - Musketeer	66-55	2	66-105
Sierra Sport Sundowner B-19, C-23, 24R	66-55	2	66-105
Debonair CD-1 thru CD-387	66-4	2	66-111
4 Pack of 66-111	66-4	2	66-11
Debonair B-33	66-2	2	66-106
Skipper	66-3	2	66-112
BELLANCA - Citabria, Champ	66-2	2	66-106
Scout	66-3	1	66-106
Decathalon, Scout 8GCBC	66-2	2	66-106
Viking, Aries 250	66-55	2	66-105
CESSNA - 150A, B, C, D, E	66-2	2	66-106
	66-56	2	66-106
150F, G, H, J , K, 152, F-152, FA-152	66-55	2	66-105
All Cessnas using Cessna/McCauley Brakes	B-30026	2	66-109
Skyhawk 172, Cardinal 177 All	66-55	2	66-105
Skywagon 180	66-55	4	66-105
Skylane 182 H, J, K, L, M, N	66-55	2	66-105
185A, B	66-2	2	66-106
185C, D, E	66-55	2	66-105
185 with crosswind gear	66-2	2	66-106
AGWagon	66-55	4	66-105
Stationair-6 205, 205A	66-2	2	66-106
Stationair-6 205, 205A (s/n 205-0481 & up)	66-55	4	66-105
206, U206A, D, E & Turbo models	66-55	4	66-105
207, T207	66-55	4	66-105
210C	66-4	2	66-111
210, P210, 210N, P210N	66-55	4	66-105
303, T3030	66-44	4	66-44
305A, B, C, D, E, F	66-55	4	66-105
310, 335	66-33	6	66-33
Skymaster 336	66-2	2	66-106
337, T337, 337B, C, C, E, T337B, C, D, E	66-55	4	66-105
All Cessnas using Cessna/McCauley Brakes	B-30026	2	
CIRRUS			
SR-20	066-14100	4	66-141

Aircraft Make & Model	Old Cleveland P/N	# Reg	New Cleveland P/N
GRUMMAN			
AA-1, A, B, AA-5, AA-5A, AA-5B, Tiger, TR-2	66-55	2	66-105
AG-CAT	66-3	1	66-106
	66-56	2	66-106
G-154	66-2	2	66-106
Widgeon G44, G44A, Scan Type 30	66-11700	2	66-11700
MAULE - Jetasen/ROcket, Lunar/Rocket	66-55	2	66-55
MOONEY - Most M20, A, B, D, E	66-4	2	66-111
PIPER - Colt PA22-108	66-2	2	66-106
	66-56	2	66-106
Apache PA-23-150	66-2	2	66-106
	66-56	2	66-106
Apache/Aztec PA-23-235,250, Series	66-2	4	66-106
	66-3	4	66-106
Comanche PA-24-180, 250, 260	66-2	2	66-106
Pawnee C PA-25	66-2	2	66-106
Cherokee/Cruiser PA-28-140	66-2	2	66-106
PA-28-140 s/n 28-20521 & up	66-55	2	66-105
Cherokee PA-28-150	66-2	2	66-106
Cherokee PA-28-160 s/n 28-1761 & up	66-55	2	66-105
Cherokee/Warrier PA-28-151	66-55	2	66-105
Cherokee PA-28-160	66-2	2	66-106
Cherokee/Warrier II PA-28-161	66-55	2	66-105
Cherokee/Archer PA-28-180 to 28-1760	66-2	2	66-106
Cherokee/Archer PA-28-180 28-1761 & up	66-55	2	66-105
Cherokee/Pathfinder PA-28-181, PA-28-236	66-55	2	66-106
PA-28R-180, PA-28-200	66-2	2	66-105
PA-28R-180 s/n 288R-7130006 & up	66-55	2	66-105
PA-28-200 s/n 28R-7135110 & up	66-55	2	66-106
PA-28R-201T, 201, PA-28RT-201, 201T	66-55	2	66-105
Early PA-28-235	66-56	2	66-105
Early PA-28R-180, 200	66-56	2	66-105
Twin Comanche PA-30 Serial # 30-845 and on	66-19	2	66-62
Twin Comanche PA-30 Serial # 30-2 thru 30-845	66-19	2	66-65
Navajo B, PA31-300, 310, Turbo Navajo	66-33	6	66-33
Chieftain, PA-31-350	66-33	6	66-33
Cherokee/Six-260 PA-32-260	66-55	4	66-105
PA-32-300 s/n 32-40000 thru 7200029	66-55	4	66-105
PA-32R-300, 32RT-300	66-55	4	66-105
PA-38-112 (6” wheel)	66-71	2	66-112
PA-38-112 (5” wheel)	66-56	2	66-106
PA-39	66-19	1	66-62
PA-39, PA-39-1 & up	66-3	1	66-106
PA-44-180	66-55	4	66-105
TAYLORCRAFT			
Sportsman 100	66-55	2	66-105

253-848-9349
SpencerAircraft.com

Spencer Aircraft provides the information in this catalog for its customers as a ***reference only*** and it is not intended for design or guarantee of accuracy. Though it is our policy to ship all orders in a timely manner, Spencer Aircraft cannot guarantee that all items will be in stock at all times.

RAPCO BRAKE APPLICATION GUIDE

FAA-PMA Approved: Brake Disc, Linings, Overhaul Kits, Rivets, Mounting Pins, Pressure Plates, Shim Insulators, Drive Keys.
Replacements for Cleveland and McCauley Wheel and Brake Assemblies

This application guide is to be used for Reference only.
When Selecting a part for installation consult the appropriate aircraft maintenance manual, parts catalog, or equipment list for optional installations.
The convert an original equipment part number to a RAPCO part number, add RA to the beginning of the number.
Refer to the FAA-PMA Supplement for installation eligibility.





Sections:

Section 1: Type Certificated Aircraft
Section 2: Kit Planes
Section 3: Experimental Aircraft
Section 4: Float Plane Brakes
Section 5: McCauley Brake Disc Cross Reference and Comparison Guides
Section 6: McCauley Brake Disc Dimensions

Section 1:

Type Certificated Aircraft

Manufacturer Model	Year / Serial Number Notes	Conv/Mod Kit #	Wheel Assembly	Brake Disc	Brake Assembly	Lining	Linings Per Wheel	Rivet or Mounting Pin	Shim Insulators	Pressure Plate
Aero Commander / Rockwell / Gulfstream / Twin Commander										
100-180 Lark	Conversion Kit 6.00-6	199-188	40-88A	RA164-02000	30-56F	RA066-10500	2	RA105-00200		RA063-01200
500, 500A, 500B, 500S, 500U, Aero Commander	Conversion Kit, 8.50-10	199-122	40-108	RA164-22000	30-156B	RA066-09000	8	RA105-00000 RA177-01600		
	Conversion Kit, 8.50-10	199-122A	40-198	RA164-22000	30-156C	RA066-09000	8	RA105-00000 RA177-01600		
560F, 680F, 680FL, 680FL(P), 680T, 680V, 680W, 681, 685, 690, 690A,	Conversion Kit, 8.50-10	199-80	40-107A	RA164-07200	30-107E	RA066-09000	8	RA105-00000 RA177-01600		
690B, 690C, 690D, 695, 695A, 695B	Conversion Kit, 8.50-10	199-80A	40-107A	RA164-07200	30-107D	RA066-09000	8	RA105-00000 RA177-01600		
690B, 690C, 695, 695A, 840, 980, 1000	1980 and on		40-107A	RA164-07200	30-107 30-107B 30-107A 30-107, B, C 30-107A, D	RA066-09000	8	RA105-00000 RA177-01600		
700			40-128C	RA164-05006	30-93A	RA066-02200	6	RA177-00300		
Aerospatiale - see Daher										
Aerofab - see Lake										
Aermacchi - see Siah Marchetti										
Aerostar / Ted Smith Aerostar / Piper Aerostar										
600, 601, 601P, 602P, 700P, PA-60-600, 600A, -601B PA-60-601P, -602P, -700P	171 and on 1975 and on		40-124	RA164-05006	30-88	RA066-02200	8	RA177-00300	RA068-01700	
Agusta / Caproni Vizzola - also see Siah Marchetti										
C22J			40-151	RA164-08500	30-133	RA066-10500	2	RA105-00200		
					30-164	RA066-06200	2	RA177-00300		
Air Tractor										
AT-300	8.50-10 Tire		40-101	RA164-03006	30-67X	RA066-10800	4	RA105-00200		
AT-301, -302, -302A, AT-400A	8.50-10 Tire		40-101	RA164-03006	30-89	RA066-10800	6	RA105-00200		RA063-01300
AT-400, -402, AT-501, -502, -503, -503A	29x11.00-10 Tire		40-133	RA164-05806	30-95C	RA066-10800	12	RA105-00200		RA063-01300
AT-401, -401A	Pressure Plate Assy. >		40-234	RA164-05606	30-164	RA066-10800	8	RA105-00200		RA063-02500 RA073-02000
AT-502			40-403	RA164-22002	30-231	RA066-06850	12	RA177-01600	RA068-01600	
AT-802, -802A			40-279	RA164-23000	30-210	RA066-13100	16	RA105-06700		
			40-279A	RA164-23001	30-210	RA066-13100	16	RA105-06700		
			40-279A	RA164-23002	30-210A	RA066-13100	16	RA105-06700		
Allied Ag Cat / Grumman										
G164 Ag Cat	1 thru 399, 8.50-6		40-47		30-32C	RA066-10800	4	RA105-00200	RA068-01100	
	1 thru 399, 8.50-10		40-101	RA164-03006	30-67	RA066-10800	4	RA105-00200		
Super Ag Cat G164B/450	401 and up, 8.50-10		40-101	RA164-03006	30-67	RA066-10800	4	RA105-00200		
			40-101	RA164-03006	30-67E (HD)	RA066-10800	8	RA105-00200		
Super Ag Cat G164A/600 G164B/450	8.50-10 Tire		40-101	RA164-03006	30-67	RA066-10800	4	RA105-00200		
	8.50-10 Tire HD Opt.		40-101	RA164-03006	30-67E (HD)	RA066-10800	8	RA105-00200		
Super Ag Cat G164B/450	660 thru 708, 8.50-10		40-101	RA164-03006	30-67	RA066-10800	4	RA105-00200		
			40-101	RA164-03006	30-67E (HD)	RA066-10800	8	RA105-00200		
	709 and up, 8.50-10		40-101	RA164-03006	30-67III	RA066-10800	8	RA105-00200		

Spencer Aircraft provides the information in this catalog for its customers as a ***reference only*** and it is not intended for design or guarantee of accuracy. Though it is our policy to ship all orders in a timely manner, Spencer Aircraft cannot guarantee that all items will be in stock at all times.

Manufacturer Model	Year / Serial Number Notes	Conv/Mod Kit #	Wheel Assembly	Brake Disc	Brake Assembly	Lining	Linings Per Wheel	Rivet or Mounting Pin	Shim Insulators	Pressure Plate
Super Ag Cat G164B/525	8.50-10 Tire		40-101 40-101	RA164-03006 RA164-03006	30-67 30-67E (HD)	RA066-10800 RA066-10800	4 8	RA105-00200 RA105-00200		
Super Ag Cat G164C/600	29x11.00-10 Tire Pressure Plate Assy. >		40-133	RA164-05806	30-84	RA066-10800	8	RA105-00200		RA063-02500 RA073-02600
Turbo Ag Cat G164D/T G164D/ST G164D/SST	29x11.00-10 Tire Pressure Plate Assy. >		40-133	RA164-05806	30-84	RA066-10800	8	RA105-00200		RA063-02500 RA073-02600
Ag Cat B-Plus/450, B-Plus/600	8.50-10 Tire		40-101 40-101	RA164-03006 RA164-03006	30-67 30-67E (HD)	RA066-10800 RA066-10800	4 8	RA105-00200 RA105-00200		
Marsh G164C-T Turbo Ag Cat	29x11.00-10 Tire Pressure Plate Assy. >		40-133	RA164-05806	30-84	RA066-10800	8	RA105-00200		RA063-02500 RA073-02600
Mid Continent King Cat	29x11.00-10 Tire Pressure Plate Assy. >		40-133	RA164-05806	30-84	RA066-10800	8	RA105-00200		RA063-02500 RA073-02600
G-164B Super B Turbine	8.50-10 Tire		40-101	RA164-03006	30-67E	RA066-10800	8	RA105-00200		
Alon Aircoupe - see Univair										
American Aviation / American General- see Grumman American										
American Champion / Bellanca/ Champion / Aeronca										
7ECA, 7AGCAA Citabria, 7GCBC, 7KCBA, 7SRS	1984 and on		40-28D	RA164-00500	30-19A	RA066-10800	2	RA105-00200		
7ACA Champ	Thru 1970		40-28D	RA164-00500	30-19A	RA066-10800	2	RA105-00200		
	1971 and on		40-78B	RA164-01700	30-9	RA066-10800	2	RA105-00200		
8GCBC Scout	8.50-6 Tire		40-47		30-32B	RA066-10800	4	RA105-00200	RA068-01100	
8KCAB Decathalon			40-28D	RA164-00500	30-19A	RA066-10800	2	RA105-00200		
T-250 Aries			40-75G	RA164-01501	30-52S	RA066-10800	4	RA105-00200		RA063-01100
Arctic Aircraft										
S1B2 Artic Tern	001 - 1021		40-28	RA164-00500	30-18	RA066-10800	2	RA105-00200		
	1022 and on		40-66B	RA164-02000	30-55	RA066-10500	2	RA105-00200		RA063-01200
Aviat / Pitts / Christen / Sky Int.										
S-1S, S-1T Pitts Special S-2, S-2A, S-2B, S-2B			40-78B	RA164-01700	30-9	RA066-10800	2	RA105-00200		
A-1 Husky			40-60	RA164-06700	30-60, -60A	RA066-10800	4	RA105-00200		
Avions Pierre Robin / CADS / APEX										
140,160				RA164-03601	30-52T	RA066-10500	4	RA105-00200		RA063-01100
DR400 Series			40-97D	RA164-02601	30-63E	RA066-10500	2	RA105-00200		RA063-01200
HR100/120, 200				RA164-02601	30-63D, -63E	RA066-10500	2	RA105-00200		RA063-01200
HR100/200, 210				RA164-03601	30-52N	RA066-10500	4	RA105-00200		RA063-01100
DR400 Series				N/A	30-52T	RA066-10500	4	RA105-00200		RA063-01100
R1000 Series				N/A	30-63E	RA066-10500	2	RA105-00200		RA063-01200
R2000 Series				N/A	30-63E	RA066-10500	2	RA105-00200		RA063-01200
R3000 Series				N/A	30-63E	RA066-10500	2	RA105-00200		RA063-01200
Ayres										
S2R (Thrush)	29x11-10	199-66A	40-133	RA164-05806	30-66A	RA066-10800	6	RA105-00200		RA063-01300
S2R-600 Thrush	1999R thru 2173R Pressure Plate Assy. >		40-129 (HD)	RA164-05606	30-84 (HD)	RA066-10800	8	RA105-00200		RA063-02500 RA073-02600
	2173R thru 2529R Pressure Plate Assy. >		40-129		30-84	RA066-10800	6	RA105-00200		RA063-02500 RA073-02600
			40-133 (HD)	RA164-05806	30-66D (HD)	RA066-10800	12	RA105-00200		RA063-01300
	2530R and on		40-133	RA164-05806	30-66D	RA066-10800	12	RA105-00200		RA063-01300
S2R-660 Turbo Thrush			40-403	RA164-22202	30-231	RA066-09600	12	RA177-01600	RA068-01600	
S2R-800	5001R thru 5082R Pressure Plate Assy. >		40-129 (HD)		30-84 (HD)	RA066-10800	12	RA105-00200		RA063-02500 RA073-02600
	5083R and on		40-133	RA164-05806	30-66	RA066-10800	12	RA105-00200		RA063-01300
S2R-PLZ800 S2R-R1340 S2R-1820 S2R-T11			40-133	RA164-05806	30-66D	RA066-10800	12	RA105-00200		RA063-01300
S2R-T15	T15-001		40-133	RA164-05806	30-66	RA066-10800	12	RA105-00200		RA063-01300
	T15-002 and on		40-133	RA164-05806	30-66D	RA066-10800	12	RA105-00200		RA063-01300
S2R-T34	6000 thru 6023		40-133	RA164-05806	30-66	RA066-10800	12	RA105-00200		RA063-01300
	6024 and on		40-133	RA164-05806	30-66D	RA066-10800	12	RA105-00200		RA063-01300
S2R-T41 S2R-T65 S2R-T65HG	T41-089 and -090		40-133	RA164-05806	30-66D	RA066-10800	12	RA105-00200		RA063-01300
Beech / Beechcraft / Raytheon / Hawker Beechcraft / Textron										
D18C, D18S, E18S, E18S-9700, H18, G18S, C45G, TC-45G, RC-45J, C-45H,	Conversion Kit, 8.50-10 Volpar	199-127	40-179	RA164-22600	30-144B	RA066-09000	8	RA105-00200 RA177-01600		
TC-45H, TC45J, JRB-6, 3N, 3NM, 3TM	Conversion Kit, 11.00-12	199-141	40-21101	RA164-22400	30-170	RA066-10000	8	RA105-00200 RA177-01600	RA068-04600	

253-848-9349
SpencerAircraft.com

Spencer Aircraft provides the information in this catalog for its customers as a ***reference only*** and it is not intended for design or guarantee of accuracy. Though it is our policy to ship all orders in a timely manner, Spencer Aircraft cannot guarantee that all items will be in stock at all times.

Manufacturer Model	Year / Serial Number Notes	Conv/Mod Kit #	Wheel Assembly	Brake Disc	Brake Assembly	Lining	Linings Per Wheel	Rivet or Mounting Pin	Shim Insulators	Pressure Plate
45 (TY-34), A45 (T-34A-34A, B-45), D45 (T-34B)	Conversion Kit, 6.50-8	199-50	40-98	RA164-02706	30-66	RA066-04400	4	RA177-00300	RA068-01700	
19, 19A, B19, A-23, 23, A23, A23A, B23, C23, A23-24, A24 A24R	Conversion Kit, 6.00-6 MB-1 thru MB-521 M-2 thru M-1361 MA-1 thru MA-268 MC-2 thru MC-97	199-124	40-113C	RA164-04300	30-75B	RA066-10500	2	RA105-00200		RA063-01200
23, 24 Musketeer, B19, C23, 24R Sierra, Sport, Sundowner	1971 and on		40-113C	RA164-04300	30-75A	RA066-10500	2	RA105-00200		RA063-01200
	1974 to 1977		40-113C	RA164-04300	30-75B	RA066-10500	2	RA105-00200		RA063-01200
	1978 and on		40-59	RA164-06900	30-59	RA066-11200	2	RA105-00200		
Debonair 35-33, 35-A33, 35-B33, 35-C33, 35-C33A,	Conversion Kit,	199-49	40-83	RA164-02504	30-54	RA066-10500	4	RA105-00200		RA063-01100
Bonanza E33A, F33, F33A, F33C	6.00-6 or 7.00-6 Tire									
35-33, 35-A33, 35-B33, 35-C33, 35-C33A E33A, F33, F33A, F33C	Conversion Kit, 6.00-6	199-124	40-113C	RA164-04300	30-75B	RA066-10500	2	RA105-00200		RA063-01200
33, A33	CD-1 thru CD-387		40-1	RA164-00900	30-1	RA066-11100	2	RA105-00300		
B33	CD-388 thru CD-639		40-37	RA164-00700	30-24	RA066-10600	4	RA105-00200		
F33A	CD-1272 thru CD-1304 CJ-31 thru CJ-124		40-83	RA164-02504	30-54	RA066-10500	4	RA105-00200		RA063-01100
F33C,	CE-301 thru CE-634		40-83	RA164-02504	30-54	RA066-10500	4	RA105-00200		RA063-01100
F33A, F33C	CE-635 thru CE-1071 CJ-125 thru CJ-155		40-83A	RA164-02505	30-54A	RA066-10500	4	RA105-00200		RA063-01100
F33A, F33C	CE-1072 and on CJ-156 and on		40-83A	RA164-02505	30-54C	RA066-10500	4	RA105-00200		RA063-01100
T34C Mentor			40-111A	RA164-06506	30-74B	RA066-06700	4	RA177-00300		
Bonanza 35, A35, B35, C35, D35, E35, F35, G35 H35, J35, K35, M35, N35, P35, 35R, S35, V35, V35A, V35B	Conversion Kit, 6.00-6 or 7.00-6 Tire	199-49	40-83	RA164-02504	30-54	RA066-10500	4	RA105-00200		RA063-01100
35, A35, B35, C35, D35, E35, F35, G35, 35R, H35, J35, K35, M35, N35, P35, S35	Conversion Kit, 6.50-8	199-50	40-98	RA164-02706	30-66	RA066-04400	4	RA177-00300	RA068-01700	
35, A35, B35, D35, E35, F35, G35, 35R, G33, H35, J35, K35, M35, N35, P35, S35, V35, V35A, V35B	Conversion Kit, 6.00-6	199-124	40-113C	RA164-04300	30-75B	RA066-10500	2	RA105-00200		RA063-01200
G33 V35BTC 36 Bonanza	CD-1272 thru CD-1304 CJ-31 thru CJ-124 D-9193 thru D-9861 E-1 thru E-824		40-83	RA164-02504	30-54	RA066-10500	4	RA105-00200		RA063-01100
	D-9862 and on		40-83	RA164-02504	30-54A	RA066-10500	4	RA105-00200		RA063-01100
A36	Conversion Kit, 6.00-6	199-124	40-113C	RA164-04300	30-75B	RA066-10500	2	RA105-00200		RA063-01200
A36	Conversion Kit, 6.00-6 or 7.00-6 Tire	199-49	40-83	RA164-02504	30-54	RA066-10500	4	RA105-00200		RA063-01100
A36 A36, A36TC	E-825 thru E-1802 E-1803 thru E-2254 EA-1 thru EA-186 EA-187 thru EA-442		40-83A 40-83B	RA164-02505 RA164-02505	30-54A 30-54A	RA066-10500 RA066-10500	4 4	RA105-00200 RA105-00200		RA063-01100 RA063-01100
A36, B36TC	E-2255 and on EA-443 and on		40-83B	RA164-02505	30-54C	RA066-10500	4	RA105-00200		RA063-01100
Travel Air 95, B95, B95A, D95A, E95, Baron, 95-55, 95-A55, 95-B55, 95-B55A, 95-B55B, 95-C55, 95-C55A, D55, D55A, E55, E55A	Conversion Kit, 6.50-8	199-50	40-98	RA164-02706	30-66	RA066-04400	8	RA177-00300	RA068-01700	
Twin Bonanza 50, B50, C50, D50, D50A, D50B, D50C, D50E, E50, F50, G50, H50, J50	Conversion Kit, 8.50-10 Twin Bonanza Excalibur	199-88	40-134A	RA164-06308	30-99	RA066-06600	8	RA177-01800		
Baron, B55, E55	1978, Heavy Duty Opt.		40-126	RA164-06106	30-93B	RA066-04400	6	RA177-00300	RA068-02700	
	1979 and on		40-98G	RA164-02706	30-66G	RA066-09700	4	RA177-00300	RA068-01700	
	Heavy Duty Option		40-126D	RA164-06106	30-93C	RA066-09700	6	RA177-00300	RA068-02700	
Travel Air 95, B95, B95A, D95A, E95, Baron, 95-55, 95-A55, 95-B55, 95-B55A, 95-B55B, 95-C55, 95-C55A, Baron D55, D55A, E55, E55A, 58, 58A	Conversion Kit 6.50-8 19.5x6.75-8 Tire	199-138	40-126D	RA164-06106	30-93C	RA066-09700	6	RA177-00300	RA068-02700	
C55 D55 E55 58TC Baron A56TC	TE-1 and on TE-452 and on TE-768 and on TD-1 thru TD-83 TD-84 and on		40-98	RA164-02706	30-66	RA066-04400	4	RA177-00300	RA068-01700	
			40-98	RA164-02706	30-66A	RA066-02200	4	RA177-00300	RA068-01700	
58 Baron	1978, Heavy Duty Opt.		40-126	RA164-06106	30-93B	RA066-04400	6	RA177-00300	RA068-02700	
	1979 and on		40-98G	RA164-02706	30-66G	RA066-09700	4	RA177-00300	RA068-01700	
	Heavy Duty		40-126D	RA164-06106	30-93C	RA066-09700	6	RA177-00300	RA068-02700	
58	TH-1 and on		40-98	RA164-02706	30-66	RA066-04400	4	RA177-00300	RA068-01700	
58TC	1984 and on		40-171	RA164-20606	30-145	RA066-09700	6	RA177-00300	RA068-02700	
58P	1984 and on		40-171	RA164-20606	30-145	RA066-09700	6	RA177-00300	RA068-02700	
58P, 58TC, 60, A60, B60	Conversion Kit	199-73	40-126	RA164-06106	30-93	RA066-04400	6	RA177-00300	RA068-02700	
B60 Duke	1984 and on		40-171	RA164-20606	30-145	RA066-09700	6	RA177-00300	RA068-02700	

Spencer Aircraft provides the information in this catalog for its customers as a ***reference only*** and it is not intended for design or guarantee of accuracy. Though it is our policy to ship all orders in a timely manner, Spencer Aircraft cannot guarantee that all items will be in stock at all times.

Manufacturer Model	Year / Serial Number Notes	Conv/Mod Kit #	Wheel Assembly	Brake Disc	Brake Assembly	Lining	Linings Per Wheel	Rivet or Mounting Pin	Shim Insulators	Pressure Plate
Queen Air 65, A65, 70, 65-80, 65-A80, 65-880, 65-88	Conversion Kit 6.50-8 19.5x6.75-8 Tire	199-123	40-179B	RA164-22900	30-144A	RA066-09000	8	RA105-00200 RA177-01600		
76 Duchess			40-83	RA164-02504	30-54B	RA066-10500	4	RA105-00200		RA063-01100
77 Skipper			40-59	RA164-06900	30-59D	RA066-18200	2	RA105-00200		
King Air 65-90, 65-A90, 65-A90-1, (JU-21A), 65-A90-4 (RU-21E, RU-21H), B90,C90, C90A,C90GT, C90GTi, E90, H90 (T-44A), F90, 99, 99A, A99A, B99, C99	Conversion Kit, 8.50-10	199-90	40-170A	RA164-20900	30-144	RA066-09000	8	RA105-00200 RA177-01600		
King Air F90, 99, 99A, A99A, B99, C99, 100, A100, B100 KingAir, 200, 200C, 200CT, 200T King Air, A200, A200C, A200CT, B200, B200C, B200CT, B200T, B200GT, B200CGT	Conversion Kit, 18x5.5	199-110	40-289	RA164-21000	30-146	RA066-09100 RA066-09200	2 2		RA066-04100	
T34C Mentor			40-111A	RA164-06506	30-74B	RA066-08700	4	RA177-00300		
Bell Helicopter										
230, 430	Key Drive PN: RA205-02900		40-27B							
Bellanca										
17-30A, 17-31A, 17-31ATC, 300A, Viking			40-75E	RA164-01501	30-52M	RA066-10500	4	RA105-00200		RA063-01100
T-250 Aries			40-75G	RA164-01501	30-52S	RA066-10500	4	RA105-00200		RA063-01100
Bombardier - see, de Havilland										
Britten-Norman / Pilatus Britten-Norman										
BN-2, BN-2A Islander, BN-2B-20, -21, -26, -27,	1969 thru 1979		40-90	RA164-02201	30-23A	RA066-06500 (PP) RA066-06200 (BP)	2 2	RA177-00300 RA177-00300	RA066-01100	RA063-01100
BN-2T	1979 and on		40-90B	RA164-02201	30-23A, -22C	RA066-06500 (PP) RA066-06200 (BP)	2 2	RA177-00300 RA177-00300	RA066-01100	RA063-01100
BN-2A-2, -3, -6, -8, -9, -20, -21, -27, BN2B-20, -21, -26, -27	All, with 7.00-6 Tire		40-90F	RA164-01506	30-23D	RA066-06500 (PP) RA066-06200 (BP)	2 2	RA177-00300 RA177-00300	RA066-01100	RA063-01100
BN-2A MK111, Trilander, BN-2A MK111-2, BN-2A MK111-3			40-98F	RA164-02706	30-66H	RA066-02200	4	RA177-00300	RA066-01700	
Defender 4000			40-128E		30-93E	RA066-04400	6	RA105-00300		
Cessna / Textron										
120, 140										
120, 140 120, 140, 140A	8004 thru 13099, 6.00-6 13400 & up, 6.00-6	199-40	40-97A	RA164-02601	30-63A	RA066-10500	2	RA105-00200		RA063-01200
150, 152 with Cleveland Brakes										
150A, B	1961 to 1962, 5.00-5 150-59119 thru 150-59709		40-12	RA164-00400	30-9	RA066-10600	2	RA105-00200		
150C	1963 with 5.00-5		40-19	RA164-00400	30-9	RA066-10600	2	RA105-00200		
	6.00-6 Tire		40-57	RA164-00500	30-40	RA066-10600	2	RA105-00200		
150D, E	1964 to 1965, 5.00-5		40-78	RA164-01700	30-9	RA066-10600	2	RA105-00200		
	6.00-6 Tire		40-79A	RA164-01600	30-40	RA066-10600	2	RA105-00200		
150F, G, F150F, G (Reims)	1966 to 1967		40-97, -97A	RA164-02601	30-63, -63A	RA066-10500	2	RA105-00200		RA063-01200
150H, J, K F150H, J A150K Aerobat	1968 to 1970 1970		40-97A	RA164-02601	30-63A	RA066-10500	2	RA105-00200		RA063-01200
150L A150L F150K FA150K, L FRA150L 152 A152 F152, FA152	1971 and on 1971 and on 1970 and on 1970 to 1971 1972 and on 1978 and on 1978 and on 1978 and on		40-113	RA164-04000	30-75	RA066-10500	2	RA105-00200		RA063-01200
150, 152, with McCauley Brakes - also see Comparison Guide in Section 4.										
150, A150	1971 to 1973		D-30363	N/A	C-30018	RA066-30026	2	RA105-00200		RA063-30025
F150, F152	1973 to 1978		D-30260	RA164-30195	C-30018	RA066-30026	2	RA105-00200		RA063-30025
152 FA152 (Reims)	1978		D-30580	RA164-30195	C-30018-4	RA066-30026	2	RA105-00200		RA063-30025
	1976 to 1977		D-30291-8	RA164-30440	C-30018-4	RA066-30026	2	RA105-00200		RA063-30025
	1977		D-30660-1	RA164-30615-1	C-30018-6	RA066-30026	2	RA105-00200		RA063-30025
	1978 to 1981		D-30660-1	RA164-30615-1	C-30018-6	RA066-30026	2	RA105-00200		RA063-30025
	1982 and on		D-30660-1	RA164-30615-1	C-30784-6	RA066-30026	2	RA105-00200		RA063-30025
162										
162 SkyCatcher			40-308	RA164-01700	30-308	RA066-14800*	2	RA105-00200		
170										
170, 170A, 170B	Conversion Kit, 6.00-6	199-46	40-97A	RA164-02601	30-63A	RA066-10500	2	RA105-00200		RA063-01200

253-848-9349
SpencerAircraft.com

Spencer Aircraft provides the information in this catalog for its customers as a ***reference only*** and it is not intended for design or guarantee of accuracy. Though it is our policy to ship all orders in a timely manner, Spencer Aircraft cannot guarantee that all items will be in stock at all times.

Manufacturer Model	Year / Serial Number Notes	Conv/Mod Kit #	Wheel Assembly	Brake Disc	Brake Assembly	Lining	Linings Per Wheel	Rivet or Mounting Pin	Shim Insulators	Pressure Plate
172 with Cleveland Brakes										
172, 172A thru 172E Skyhawk; P172D	Conversion Kit, 6.00-6	199-46	40-97A	RA164-02601	30-63A	RA066-10500	2	RA105-00200		RA063-01200
172F	172-51823 thru 172-52808		40-97A	RA164-02601	30-56, -63A	RA066-10500	2	RA105-00200		RA063-01200
172F, G, H	172-52809 thru 172-56512		40-97A	RA164-02601	30-63, -63A	RA066-10500	2	RA105-00200		RA063-01200
172I, K	172-56513 thru 172-59223		40-97A	RA164-02601	30-63A	RA066-10500	2	RA105-00200		RA063-01200
172L thru 172S	1971 and on 172-59224 and on		40-113	RA164-04009	30-75A	RA066-10500	2	RA105-00200		RA063-01200
F172F, G	F172-0096 thru F172-0204		40-97A	RA164-02601	30-56, -63A	RA066-10500	2	RA105-00200		RA063-01200
172G, H	F172-0205 thru F172-00754		40-97A	RA164-02601	30-63A	RA066-10500	2	RA105-00200		RA063-01200
F172K	172-00755 and on		40-113	RA164-04009	30-75A	RA066-10500	2	RA105-00200		RA063-01200
F172RG Cutlass	172-RG0001 and on		40-113	RA164-04009	30-75	RA066-10500	2	RA105-00200		RA063-01200
172 with McCauley Brakes - also see Comparison Guide in Section 4.										
172, R172	1971 to 1973 (3 - 1/4")		D-30363	N/A	C-30018-2	RA066-30026	2	RA105-00200		RA063-30025
F172 (Reims)	1973 to 1976		D-30260	RA164-30195	C-30018-2	RA066-30026	2	RA105-00200		RA063-30025
FR172 (Reims)	1976 (6 - 5/16" Bolts)		D-30580	RA164-30195	C-30018-2	RA066-30026	2	RA105-00200		RA063-30025
	1977 (3 - 1/4" Bolts)		D-30600-1	N/A	C-30018-6	RA066-30026	2	RA105-00200		RA063-30025
	1978 to 1981		D-30560-1	RA164-30615-1	C-30018-6	RA066-30026	2	RA105-00200		RA063-30025
	1982 and on		D-30560-1	RA164-30615-1	C-30764-6	RA066-30026	2	RA105-00200		RA063-30025
172RG Cutlass	1980 to 1981		D-30560-1	RA164-30615-1	C-30018-6	RA066-30026	2	RA105-00200		RA063-30025
	1982 and on		D-30560-1	RA164-30615-1	C-30718-6	RA066-30026	2	RA105-00200		RA063-30025
175										
175, 175A, 175B, 175C Skylark	Conversion Kit, 6.00-6	199-46	40-97A	RA164-02601	30-63A	RA066-10500	2	RA105-00200		RA063-01200
177 with Cleveland Brakes										
177 A, B Cardinal	177-01165 thru 177-01530		40-97A	RA164-02601	30-63, -63A	RA066-10500	2	RA105-00200		RA063-01200
177B	177-01531		40-113	RA164-04009	30-75	RA066-10500	2	RA105-00200		RA063-01200
177A, B	177-1165 and on		40-113	RA164-04009	30-75	RA066-10500	2	RA105-00200		RA063-01200
177RG, F177RG, 177, 177RG, F177RG	1971 to 1974		40-113	RA164-04009	30-75	RA066-10500	2	RA105-00200		RA063-01200
177 with McCauley Brakes - also see Comparison Guide in Section 4.										
177RG, F177RG	1975		D-30580	RA164-30195	C-30018-4	RA066-30026	4	RA105-00200		RA063-30025
177, 177RG	1976		D-30291-6	RA164-30449	C-30018-4	RA066-30026	4	RA105-00200		RA063-30025
F177RG (Reims)	1977		D-30600-1	N/A	C-30018-5	RA066-30026	4	RA105-00200		RA063-30025
	1978 and on		D-30560-1	RA164-30615-1						
180 with Cleveland Brakes										
180, 180A, thru 180F Skywagon	Conversion Kit, 6.00-6	199-46	40-97A	RA164-02601	30-63A	RA066-10500	2	RA105-00200		RA063-01200
180, 180A thru 180H,	Conversion Kit, 6.00-6	199-62	40-75D	RA164-03601	30-52N	RA066-10500	4	RA105-00200		RA063-01900
180J, 180K	Conversion Kit, 6.00-6	199-62A	40-75T	RA164-08009	30-52N	RA066-10500	4	RA105-00200		RA063-01900
180, 180A, thru 180F, 180H, 180J	Conversion Kit, 6.00-6	199-60	40-75B	RA164-01501	30-52	RA066-10500	4	RA105-00200		RA063-01900
180G	180-51313 and on		40-75B	RA164-01501	30-52	RA066-10500	4	RA105-00200		RA063-01900
180H	180-52011 thru 180-52195		40-75D	RA164-03601	30-52D	RA066-10500	4	RA105-00200		RA063-01900
180H	180-52196 and on		40-75D	RA164-03601	30-52N	RA066-10500	4	RA105-00200		RA063-01900
180H	180-51775 thru 180-51993		40-66	RA164-00709	30-21	RA066-10600	4	RA105-00200		
180 with McCauley Brakes - also see Comparison Guide in Section 4.										
180 Series Skywagon	1973 to 1974		D-30363-1	N/A	C-30018-1, -2	RA066-30026	2	RA105-00200		RA063-30025
			D-30291-3	RA164-30414	C-30018-5, -6	RA066-30026	4	RA105-00200		RA063-30025
	1974		D-30363-4	N/A	C-30018-5, -6	RA066-30026	4	RA105-00200		RA063-30025
	1974 to 1978		D-30291-1	RA164-30188	C-30018-5, -6	RA066-30026	4	RA105-00200		RA063-30025
	1978 and on		D-30560-2	RA164-30615-2	C-30018-5, -6	RA066-30026	4	RA105-00200		RA063-30025
182 with Cleveland Brakes										
182, 182A thru 182G Skylane	Conversion Kit, 6.00-6	199-46	40-97A	RA164-02601	30-63A	RA066-10500	2	RA105-00200		RA063-01200
182G thru N	182-55059 thru 182-60445		40-97A	RA164-02601	30-56A 30-63, -63A	RA066-10500 RA066-10500	2 2	RA105-00200 RA105-00200		RA063-01200 RA063-01200
182N, 182P, 182Q	182-60446 thru 182-67715		40-113	RA164-04009	30-75	RA066-10500	2	RA105-00200		RA063-01200
R182, TR182, FR182 (Reims)	1978 and on		40-75B	RA164-01501	30-52U	RA066-10500	4	RA105-00200		RA063-01900
182S, 182T, T182T	1996 and on		40-75B	RA164-01501	30-52U	RA066-10500	4	RA105-00200		RA063-01900
182 with McCauley Brakes - also see Comparison Guide in Section 4.										
182 Series	1976		D-30291-6	RA164-30449	C-30018-4	RA066-30026	4	RA105-00200		RA063-30025
F182 (Reims)	1977		D-30600-1	N/A	C-30018-5	RA066-30026	4	RA105-00200		RA063-30025
	1978 to 1980		D-30560-1	RA164-30615-1	C-30018-5	RA066-30026	4	RA105-00200		RA063-30025
R182, TR182, FR182 (Reims)	1978 and on		D-30560-3	RA164-30615-3	C-30018-3, -4	RA066-30026	4	RA105-00200		RA063-30025
T182	1981 and on		D-30560-3	RA164-30615-3	C-30018-3, -4	RA066-30026	4	RA105-00200		RA063-30025

Spencer Aircraft provides the information in this catalog for its customers as a ***reference only*** and it is not intended for design or guarantee of accuracy. Though it is our policy to ship all orders in a timely manner, Spencer Aircraft cannot guarantee that all items will be in stock at all times.

RAPCO BRAKE APPLICATION GUIDE

Manufacturer Model	Year / Serial Number Notes	Conv/Mod Kit #	Wheel Assembly	Brake Disc	Brake Assembly	Lining	Linings Per Wheel	Rivet or Mounting Pin	Shim Insulators	Pressure Plate
185 with Cleveland Brakes										
185, 185A thru 185E, A185E, A185F	Conversion Kit, 6.00-6	199-62	40-75D	RA164-03601	30-52N	RA066-10500	4	RA105-00200		RA053-01100
	Conversion Kit, 6.00-6	199-62A	40-75T	RA164-08300	30-52N	RA066-10500	4	RA105-00200		RA053-01100
185, 185A 185B, A185E, A185F	Conversion Kit, 6.00-6	199-60	40-75B	RA164-01501	30-52	RA066-10500	4	RA105-00200		RA053-01100
185, 185A	185-0001 thru 185-0512		40-32	RA164-00700	30-21	RA066-10600	4	RA105-00200		
185B	185-0513 thru 185-0653		40-66	RA164-00700	30-21	RA066-10600	4	RA105-00200		
185C, D, E	185-0654 thru 185-1095		40-75B	RA164-01501	30-52	RA066-10500	4	RA105-00200		RA053-01100
A185E, F	185-1095 and on		40-75B	RA164-01501	30-52	RA066-10500	4	RA105-00200		RA053-01100
A185E, F	185-1471 and on		40-75D	RA164-03601	30-52D	RA066-10500	4	RA105-00200		RA053-01100
A185E	185-1150 thru 185-1447		40-66	RA164-00700	30-21	RA066-10600	4	RA105-00200		
185 with McCauley Brakes - also see Comparison Guide in Section 4										
185 Series Skywagon	1973 to 1974		D-30065-1	N/A	C-30018-1, -2	RA066-30026	2	RA105-00200		RA053-30025
			D-30291-3	RA164-30414	C-30018-5, -6	RA066-30026	4	RA105-00200		RA053-30025
	1974		D-30065-4	N/A	C-30018-5, -6	RA066-30026	4	RA105-00200		RA053-30025
	1974 to 1978		D-30291-1	RA164-30388	C-30018-5, -6	RA066-30026	4	RA105-00200		RA053-30025
	1978 and on		D-30660-2	RA164-30615-2	C-30018-5, -6	RA066-30026	4	RA105-00200		RA053-30025
188										
188, A188, 188A Agwagon	1966 to 1972		40-75B	RA164-01501	30-52B	RA066-10500	4	RA105-00200		RA053-01100
A188A, 188B, A188B, T188C	6.50-10 Tire		40-101A	RA164-03106	30-67A	RA066-10600	4	RA105-00200		
	6.50-10 Tire		40-101	RA164-03006	30-67C	RA066-10600	4	RA105-00200		
	22 x 8.00-8 Tire		40-98A	RA164-02707	30-66A	RA066-11000	4	RA105-00200	RA068-01700	
190, 195										
190, 195, 195A, 195B	Conversion Kit, 6.50-10	199-61	40-40C	RA164-00606	30-28C	RA066-60300	6	RA177-00400	RA068-01600	
205										
205	205-0001 thru 205-0480		40-67	RA164-00700	30-35	RA066-10600	4	RA105-00200	RA068-01100	
205A Stationair	205-0481 to 205-0577		40-75B	RA164-01501	30-52	RA066-10500	4	RA105-00200		RA053-01100
206 with Cleveland Brakes										
206, P206, U206, U206F, U206G, TU206E, TU206F, TU206G, Super Skywagon, Stationair	Conversion Kit, 6.00-6	199-62	40-75D	RA164-03601	30-52N	RA066-10500	4	RA105-00200		RA053-01100
	Conversion Kit, 6.00-6	199-62A	40-75T	RA164-08300	30-52N	RA066-10500	4	RA105-00200		RA053-01100
206E, 206F, TU206E, TU206F	Conversion Kit, 6.00-6	199-60	40-75B	RA164-01501	30-52	RA066-10500	4	RA105-00200		RA053-01100
206	206-0001 thru 206-0275		40-75B	RA164-01501	30-52	RA066-10500	4	RA105-00200		RA053-01100
U206	U206-0276 thru U206-1256		40-75B	RA164-01501	30-52	RA066-10500	4	RA105-00200		RA053-01100
	U206-1257 and on 6.00-6 tire		40-75D	RA164-03601	30-52N	RA066-10500	4	RA105-00200		RA053-01100
P206, Super Skylane	P206-001 thru P206-0566		40-75B	RA164-01501	30-52	RA066-10500	4	RA105-00200		RA053-01100
	U206-0567 and on 6.00-6 tire		40-75D	RA164-03601	30-52N	RA066-10500	4	RA105-00200		RA053-01100
206H, T206H, Stationair	1996 and on		40-75B	RA164-01501	30-52U	RA066-10500	4	RA105-00200		RA053-01100
	6.00-6 tire		40-75T	RA164-08300	30-52W	RA066-10500	4	RA105-00200		RA053-01100
206 with McCauley Brakes - also see Comparison Guide in Section 4										
206 Series	1974		D-30065-2	N/A	C-30018-3, -4	RA066-30026	4	RA105-00200		RA053-30025
	1974 to 1978		D-30291-2	RA164-30388	C-30018-3, -4	RA066-30026	4	RA105-00200		RA053-30025
	1978 and on		D-30660-3	RA164-30615-3	C-30018-3, -4	RA066-30026	4	RA105-00200		RA053-30025
	1974		D-30065-4	N/A	C-30018-5, -6	RA066-30026	4	RA105-00200		RA053-30025
	1974 to 1978, 6.00-6		D-30291-1	RA164-30388	C-30018-5, -6	RA066-30026	4	RA105-00200		RA053-30025
	1978 and on, 6.00-6		D-30660-2	RA164-30615-2	C-30018-5, -6	RA066-30026	4	RA105-00200		RA053-30025
207 with Cleveland Brakes										
207 Series, Skywagon, Stationair 7, 8	207-00001 and on		40-75B	RA164-01501	30-52F	RA066-10500	4	RA105-00200		RA053-01100
	6.00-6 tire		40-75D	RA164-03601	30-52E	RA066-10500	4	RA105-00200		RA053-01100
208										
208 Caravan 1	1 thru 138 Pressure Plate Assy. > Pressure Plate Assy. >		40-179	RA164-22201	30-163	RA066-63300	6	RA177-00300	RA068-02600	RA053-02500 RA073-08500 RA073-08502
	139 and on Pressure Plate Assy. > Pressure Plate Assy. >		40-179	RA164-22201	30-182	RA066-63300	6	RA177-00300	RA068-02600	RA053-02500 RA073-08500 RA073-08502
	139 and on w/upgrade Pressure Plate Assy. > Pressure Plate Assy. >	199-281	40-179	RA164-22201	30-182A	RA066-15300	6	RA177-00300	RA068-02600	RA053-02500 RA073-08500 RA073-08502
208B	1 thru 53 Pressure Plate Assy. > Pressure Plate Assy. >		40-179	RA164-22201	30-163	RA066-63300	6	RA177-00300	RA068-02600	RA053-02500 RA073-08500 RA073-08502
	54 and on Pressure Plate Assy. > Pressure Plate Assy. >		40-179	RA164-22201	30-182	RA066-63300	6	RA177-00300	RA068-02600	RA053-02500 RA073-08500 RA073-08502
	139 and on w/upgrade Pressure Plate Assy. > Pressure Plate Assy. >	199-281	40-179	RA164-22201	30-182A	RA066-15300	6	RA177-00300	RA068-02600	RA053-02500 RA073-08500 RA073-08502

253-848-9349
SpencerAircraft.com

Spencer Aircraft provides the information in this catalog for its customers as a ***reference only*** and it is not intended for design or guarantee of accuracy. Though it is our policy to ship all orders in a timely manner, Spencer Aircraft cannot guarantee that all items will be in stock at all times.

RAPCO BRAKE APPLICATION GUIDE

Manufacturer Model	Year / Serial Number Notes	Conv/Mod Kit #	Wheel Assembly	Brake Disc	Brake Assembly	Lining	Linings Per Wheel	Rivet or Mounting Pin	Shim Insulators	Pressure Plate
210 with Cleveland Brakes										
210, 210A, 210B, 210C, Centurian 210K, 210L, 210M	Conversion Kit, 6.00-6	199-60	40-75B	RA164-01501	30-52	RA066-10500	4	RA105-00200		RA063-01100
210C	210-58098 thru 210-58220		40-21	RA164-00900	30-45	RA066-11100	2	RA105-00200		
210D thru M T210F, T210K, T210L, T210M, T210N	210-58221 thru 210-62954 T210-0001 and on		40-75B	RA164-01501	30-52	RA066-10500	4	RA105-00200		RA063-01100
P210N	Conversion Kit, 6.00-6 P21300001 thru P21300150	199-60A	40-76B	RA164-01501	30-52U	RA066-10500	4	RA105-00200		RA063-01100
P210	1984		40-142	RA164-07800	30-127C	RA066-06200	4	RA177-00300	RA068-01100	RA063-01100
210N P210N	210-62965 and on 1979 and on		40-775B	RA164-01501	30-52V	RA066-10500	4	RA105-00200		RA063-01100
210 with McCauley Brakes - also see McCauley Disc Comparison Guide in Section 4.										
210 Series	1974		D-30063-2	N/A	D-301118-3, -4	RA066-30026	4	RA105-00200		RA063-30025
	1974 to 1978		D-30291-2	RA164-30398	D-301118-3, -4	RA066-30026	4	RA105-00200		RA063-30025
	1978 and on		D-30980-3	RA164-30615-3	D-301118-3, -4	RA066-30026	4	RA105-00200		RA063-30025
350 / 400 Corvalis										
350 Corvalis (LC42-550FG)			40-406A	RA164-02504	30-233A	RA066-06200	4	RA177-00300	RA068-01100	RA063-01100
400 Corvalis (LC41-550FG)			40-406A	RA164-02504	30-233A	RA066-06200	4	RA177-00300	RA068-01100	RA063-01100
300 Series Multi Engine										
303, T303 Crusader	1982 and on		40-142	RA164-07800	30-127A	RA066-06200	4	RA177-00300	RA068-01100	RA063-01100
	6.50-8 Tire		40-98H	RA164-06406	30-66F	RA066-04400	4	RA177-00500	RA068-01700	
305A, B, C, D, E, F USAF O-1A, -1E, -1G	1951 and on		40-97E 40-75F	RA164-02601 RA164-01501	30-63K 30-52L	RA066-10500 RA066-10500	2 4	RA105-00200 RA105-00200		RA063-01200 RA063-01100
310, 310A thru 310H, E310H, 310I, 310J, 310J-1, E310J, 310K, 310L, 310N, 310P, T310P, 310Q, T310Q, 310R, T310R	Conversion Kit, 6.50-10	199-64	40-40B	RA164-01406	30-28D	RA066-03300	6	RA177-00400	RA068-01600	
310 Series	1976 to 1981		40-40A	RA164-00806	30-28B	RA066-03300	6	RA177-00400	RA068-01600	
	1981 and on		40-40D	RA164-20206	30-28B	RA066-03300	6	RA177-00400	RA068-01600	
320, 320-1, 320A, 320B, 320C, Skyknight 320D, 320E, 320F	Conversion Kit, 6.50-10	199-64	40-40B	RA164-01406	30-28D	RA066-03300	6	RA177-00400	RA068-01600	
335	1979 and on		40-40A	RA164-00806	30-28B	RA066-03300	6	RA177-00400	RA068-01600	
336 Skymaster	336-0001 thru 336-0008		40-67A	RA164-02504	30-61	RA066-10500	4	RA105-00200	RA068-01100	RA063-01100
	336-009 and on		40-75B	RA164-01501	30-52	RA066-10500	4	RA105-00200		RA063-01100
337, 337A (USAF 02D) Skymaster	1965 to 1966 337-0001 thru 337-0525		40-96A, -96E	RA164-02504	30-61	RA066-10500	4	RA105-00200		RA063-01100
337B	1967 337-0526 thru 337-0619		40-96A, -96E	RA164-02504	30-61D	RA066-10500	4	RA105-00200	RA068-01100	RA063-01100
337 B thru D	337-0620 thru 337-1193		40-96A, -96E	RA164-02504	30-61D	RA066-10500	4	RA105-00200	RA068-01100	RA063-01100
337E	337-01194 and on		40-95A	RA164-02707	30-69B	RA066-02200	4	RA177-00300	RA068-01700	
340 Series	1972 to 1981		40-40A	RA164-00806	30-28B	RA066-03300	6	RA177-00400	RA068-01600	
	1981 and on		40-40D	RA164-20206	30-28B	RA066-03300	6	RA177-00400	RA068-01600	
340, 340A	Conversion Kit, 6.50-10, Heavy Duty	199-72	40-135	RA164-06406	30-100	RA066-06600	8	RA177-01600	RA068-03100	
340, 340A	Conversion Kit, 6.50-10	199-76	40-135A	RA164-20306	30-100	RA066-06600	8	RA177-01600	RA068-03100	
400 Series Multi Engine										
401, 401A, 401B, 402, 402A, 402B, 411, 411A, 414	Conversion Kit, 6.50-10, Heavy Duty	199-72	40-135	RA164-06406	30-100	RA066-06600	8	RA177-01600	RA068-03100	
401, 401A, 401B, 402, 402A, 402B, 402C, 411, 411A, 421, 421A, 421B, 421C	Conversion Kit, 6.50-10	199-76	40-135A	RA164-20306	30-100	RA066-06600	8	RA177-01600	RA068-03100	
401 Series			40-40A	RA164-00806	30-28B	RA066-03300	6	RA177-00400	RA068-01600	
402 Series	1/4" Bolts		40-135	RA164-06406	30-100	RA066-06600	8	RA177-01600	RA068-03100	
	1981 and on, 5/16" Bolts		40-135A	RA164-20306	30-100	RA066-06600	8	RA177-01600	RA068-03100	
404 Titan	404-00001 and on		40-132	RA164-09100	30-97	RA066-06400	8	RA177-01600	RA068-02900	
411, 411A	1965 to 1968		40-40A	RA164-00806	30-28B	RA066-03300	6	RA177-00400	RA068-01600	
414 Chancellor			40-40A	RA164-00806	30-28B	RA066-03300	6	RA177-00400	RA068-01600	
414A	1981 and on, 1/4" Bolts		40-135	RA164-06406	30-100	RA066-06600	8	RA177-01600	RA068-03100	
	5/16" Bolt		40-135A	RA164-20306	30-100	RA066-06600	8	RA177-01600	RA068-03100	
421C Golden Eagle	1976 to 1980, 5/16" Bolts		40-135	RA164-06406	30-100	RA066-06600	8	RA177-01600	RA068-03100	
	1981 and on, 1/4" Bolts		40-135A	RA164-20306	30-100	RA066-06600	8	RA177-01600	RA068-03100	
425 Corsair	425-0001 and on		40-138	RA164-05500	30-113	RA066-06400	8	RA177-01600	RA068-02900	
			40-138A	RA164-05500	30-113A	RA066-06400	8	RA177-01600	RA068-02900	
441	Conversion Kit 22x7.75-10 tire	199-115	40-169	RA164-20700	30-143	RA066-07300	8	RA177-01600		
LC42-550FG / LC41-550FG - see 350 / 400 Corvalis										
Champion - see American Champion										

RAPCO BRAKE APPLICATION GUIDE

Manufacturer Model	Year / Serial Number Notes	Conv/Mod Kit #	Wheel Assembly	Brake Disc	Brake Assembly	Lining	Linings Per Wheel	Rivet or Mounting Pin	Shim Insulators	Pressure Plate
Cirrus										
SR-20			40-414	RA184-24400	30-239	RA066-14100	2	RA105-00200		
SR-20	1601 and on		40-75F	RA184-0 501	30-52A, -52B	RA066-10600	4	RA105-00200		RA063-01900
SR-22			40-75F	RA184-0 501	30-52	RA066-10600	4	RA105-00200		RA063-01900
SR-22	Upgrade or 1740 and on		40-406	RA184-02504	30-233B	RA066-06200	4	RA177-00300	RA068-01100	RA063-01900
Classic										
YMF-5 Waco	F50D1 and on		40-223	RA184-03105	30-176	RA066-10600	4	RA105-00200		
Columbia										
300, 350, 400			40-406A	RA184-02504	30-233A	RA066-06200	4	RA177-00300	RA068-01100	RA063-01900
Commander - see Grumman American or Rockwell International										
Cropleana - see NDN Aircraft										
Dahar / Aerospatiale / Socata										
100, 180, 125, 150, 160 Series, Rallye			40-97D	RA184-03601	30-63J	RA066-10500	2	RA105-00200		RA063-01200
110ST Galopin, 160ST Gamament, 180T Garrien, 180GT Galaard			40-97D	RA184-03601	30-63J	RA066-10500	2	RA105-00200		RA063-01200
220, 235 Series, 235G Guerrier (Rallye), 235GT Gabrier, 235GA Gaucho			40-84, -84B	RA184-0 900	30-41B	RA066-10600	4	RA105-00200		
TB9 Tampico, TB10 Tobago TB200			40-97E, -97F	RA184-03601	30-63J	RA066-10500	2	RA105-00200		RA063-01200
TB20, 21 Trinidad			40-84, -84B	RA184-0 900	30-41B	RA066-10600	4	RA105-00200		
TB30 Epsilon			40-90B	RA184-02201	30-23B	RA066-06500 (ps) RA066-06200 (bs)	2 2	RA177-00300 RA177-00300		
TBM 700, TBM 850	Drive Key Pin: RA205-02900		40-270 40-434							
Daimler Benz - see Messerschmitt										
de Havilland / Bombardier / Viking Air Limited										
Chipmunk DHC-1-21, -22, -22A DHC-1B-2-S3, -S5	Conversion Kit, 6.50-6	100-70	40-97D	RA184-03601	30-63P	RA066-10500	2	RA105-00200		RA063-01200
DHC-2 MK.I, Mk.II, Mk.III Beaver	Conversion Kit, 8.50-10	100-90	40-134	RA184-04300	30-99	RA066-10600	8	RA105-00200	RA068-02800	
DHC-6-1, -100, -200, 300 Twin Otter	Conversion Kit, 11.00-12	100-92	40-21101	RA184-22400	30-172	RA066-10000	8	RA105-00200 RA177-01600	RA068-04600	
Diamond										
DA20 AC, 20-C1, Katana			40-75E	RA184-24200	30-90	RA066-10600	2	RA105-00200		
DA40, -40F			40-414A	RA184-24400	30-239A	RA066-10600	2	RA105-00200		
DA42, 42 NG, 42 MNG, Twin Star			40-75Z	RA184-0 501	30-52Z	RA066-10500	4	RA105-00200		RA063-01900
Edgley - see Lavaux										
ERCO Ercoupe - see Univair										
Ernair										
MA-1B Diablo 1200	1975 and on		40-139		30-111	RA066-10600	8	RA105-00200		RA063-02500 RA073-02600
Fairchild - see Swearingen										
FFA Flugzeugwerke Altenhein AG										
AS202-18A4 Bravo	224 and on		40-97A	RA184-03601	30-63A	RA066-10500	2	RA105-00200		RA063-01200
Fletcher - see Pacific Aerospace										
Forney Aircoupe - see Univair										
Found Brothers										
100 Centennial			40-75B	RA184-0 501	30-52	RA066-10500	4	RA105-00200		RA063-01900
GAF - (Australia) / Nomad										
N22B, N22S			40-75T	RA184-04300	30-52Q	RA066-10500	4	RA105-00200		RA063-01900
N24A Nomad	Heavy Duty		40-143	RA184-04200	30-129	RA066-06200	4	RA177-00300	RA068-01100	RA063-01900

253-848-9349
SpencerAircraft.com

Spencer Aircraft provides the information in this catalog for its customers as a ***reference only*** and it is not intended for design or guarantee of accuracy. Though it is our policy to ship all orders in a timely manner, Spencer Aircraft cannot guarantee that all items will be in stock at all times.

Manufacturer Model	Year / Serial Number Notes	Conv/Mod Kit #	Wheel Assembly	Brake Disc	Brake Assembly	Lining	Linings Per Wheel	Rivet or Mounting Pin	Shim Insulators	Pressure Plate
General Avia (Italy)										
F.20, F.20TP, Pegaso			40-75G	RA164-01501	30-52P	RA66-10500	4	RA105-00200		RA063-01100
F.22, Pinguino			40-151	RA164-06500	30-164	RA66-06200	2	RA177-00300		RA063-01200
F.1900			40-131	RA164-05700	30-99	RA66-06200	2	RA177-00300	RA099-01100	RA063-01100
Gippsland										
GA8			40-75T	RA164-08300	30-52N	RA66-10500	4	RA105-00200		RA063-01100
Globe Swift										
GC1A, GC1B	Conversion Kit, 6.00-6	199-48	40-113C	RA164-04300	30-79B	RA66-10500	2	RA105-00200		RA063-01200
Great Lakes										
2T-1A, 2T-1A-1, 2T-1A-2			40-113	RA164-04000	30-75	RA66-10500	2	RA105-00200		RA063-01200
Grob / Grob Werke GMBH										
G103, G103C			40-97A	RA164-02601	30-63A	RA66-10500	2	RA105-00200		RA063-01200
G109 Series			40-78B	RA164-01700	30-9	RA66-10600	2	RA105-00200		
G115, -A, -B, -C			40-78B	RA164-01700	30-9	RA66-10600	2	RA105-00200		
G115-T			40-84	RA164-01900	30-41B	RA66-10600	4	RA105-00200		
G115-TA			40-84	RA164-01900	30-41B	RA66-10600	4	RA105-00200		
Grumann - see Grumann American or Ag Cat										
Grumman American (Gulfstream) American General, Commander - also see Rockwell International										
AA-1, -1A, -1B , TR-2 Yankee / Trainer	All models thru 1974		40-86A	RA164-02000	30-55B	RA66-10500	2	RA105-00200		RA063-01200
	1975 and on		40-86C	RA164-02000	30-55B	RA66-10500	2	RA105-00200		RA063-01200
AA-5 Traveler	All models thru 1974		40-86A	RA164-02000	30-55B	RA66-10500	2	RA105-00200		RA063-01200
AA-5A, -5B Cheetah / Tiger	1975 and on		40-86C	RA164-02000	30-55B	RA66-10500	2	RA105-00200		RA063-01200
GA-7 Cougar			40-90	RA164-02201	30-23B	RA66-06500 (PP) RA66-06200 (BP)	2 2	RA177-00300 RA177-00300	RA066-02600	
Gulfstream - see Grumann American or Aero Commander										
Hawker Beechcraft - see Beech										
Helio										
H-250, H-295, H391, H-395 Courier			40-75B	RA164-01501	30-52A	RA66-10500	4	RA105-00200		RA063-01100
			40-75D	RA164-03601	30-52N	RA66-10500	4	RA105-00200		RA063-01100
			40-75T	RA164-08300	30-52N	RA66-10500	4	RA105-00200		RA063-01100
	6.50-8 Tire		40-95A	RA164-02707	30-66A	RA66-11000	4	RA105-00200	RA066-01700	
Industeria Unidas SA (Mexico)										
A-9B Sparrow / Quail			40-99	RA164-02600	30-41, -41B	RA66-10600	4	RA105-00200		
KAI) Korea Aerospace Industries										
KT-1 Woongbi	Drive Key PN: RA205-02900									
Lake / Aerofab										
LA-4	1963 and on		40-113X	RA164-04000	30-75X	RA66-10500	2	RA105-00200		RA063-01200
			40-74, -74B	RA164-00700	30-51, -51B	RA66-10600	4	RA105-00200		
	Heavy duty option		40-41B		30-24I	RA66-10500	4	RA105-00200		RA063-01100
LA-180, LA-200 Buccaneer			40-113X	RA164-04000	30-75X	RA66-10500	2	RA105-00200		RA063-01200
Amphibian	1974		40-74A	RA164-00700	30-51, -51B	RA66-10600	4	RA105-00200		
	1975		40-74B	RA164-00700	30-51, -51B	RA66-10600	4	RA105-00200		
	1977 and on		40-74B	RA164-00700	30-51B	RA66-10600	4	RA105-00200		
	Heavy duty option		40-41B		30-24I	RA66-10500	4	RA105-00200		RA063-01100
LA-250 Renegade			40-74B	RA164-00700	30-51B	RA66-10600	4	RA105-00200		
	Option		40-41B		30-24I	RA66-10500	4	RA105-00200		RA063-01100
LA-270 Turbo Renegade	with McCauley		D-30660-7		D-30793-4	RA66-30026	4	RA105-00200		
	with Cleveland		40-41B		30-24I	RA66-10500	4	RA105-00200		RA063-01100
LAVIASA-see Piper										
Leonardo-Finmeccanica										
AW169			40-481	RA164-21000	30-290, -312	RA66-09100 (PP) RA66-09200 (BP)	1 1		RA065-04100	
Lovaux - Edgley										
EA7 Optica	1 and on		40-86	RA164-02000	30-55	RA66-10500	2	RA105-00200		RA063-01200
Marsh Aviation										
S2R-T			40-129	RA164-05606	30-94	RA66-10800	8	RA105-00200		
	29 x 11.00-10		40-133	RA164-05606	30-98	RA66-10800	12	RA105-00200		RA063-01300
G-164C-T			40-133	RA164-05606	30-94	RA66-10800	8	RA105-00200		

Spencer Aircraft provides the information in this catalog for its customers as a ***reference only*** and it is not intended for design or guarantee of accuracy. Though it is our policy to ship all orders in a timely manner, Spencer Aircraft cannot guarantee that all items will be in stock at all times.

RAPCO BRAKE APPLICATION GUIDE

Manufacturer Model	Year / Serial Number Notes	Conv/Mod Kit #	Wheel Assembly	Brake Disc	Brake Assembly	Lining	Linings Per Wheel	Rivet or Mounting Pin	Shim Insulators	Pressure Plate
Maule										
M4 Series Jetasam / Rocket			40-97D	RA164-02601	30-63E	RA066-10500	2	RA105-00200		RA063-01200
M5, 185 Series			40-97D	RA164-02601	30-63E	RA066-10500	2	RA105-00200		RA063-01200
M7 Series Star Rocket	Heavy Duty Option		40-75D	RA164-03601	30-52N	RA066-10500	4	RA105-00200		RA063-01100
M9 Series			40-75D	RA164-03601	30-52AC	RA066-10500	4	RA105-00200		RA063-01100
M.B.B. - Dimler Benz see Messerschmitt										
McCulloch										
J2 Helicopter			40-78B	RA164-01700	30-9	RA066-10600	2	RA105-00200		
Messerschmitt / Dimler Benz / Bolkow - Blohm GmbH										
B.O.-208			40-12	RA164-00400	30-9	RA066-10600	2	RA105-00200		
B.O.-209-150FF Monson, B.O.-209-150FV & RV, B.O.-209-160FV & RV			40-78B	RA164-01700	30-9	RA066-10600	2	RA105-00200		
Mitsubishi										
MU-2B, MU-2B-10, -15, -20, -25, -26, -26A, -30, -35, -36, -36A, -40, -60	Conversion Kit, 8.50-10	199-101	40-14B	RA164-07200	30-131	RA066-09000	8	RA105-00200 RA177-01600		
Mooney										
M10 Cadet/Coupe (see Univair)										
M20A, M20B, Mark 20, M20C, M20D, Master, M20E Super 21	1401 thru 3466 101 thru 260 101 thru 1306		40-24	RA164-00900	30-5	RA066-11100	2	RA105-00200		
M20C, Mark 21, Ranger, M20E, Super 21 M20F Executive 21 M20G Statesman M20J, 201, M20K, (231 Turbo, 252TSE)	670001 & on 670001 & on 680003 & on 680001 & on 24-0001 & on 25-0001 & on		40-66	RA164-02000	30-56A, -56D	RA066-10500	2	RA105-00200		RA063-01200
M20M	All S/N		40-90A	RA164-02300	30-65	RA066-10500	4	RA105-00200		RA063-01100
NDN Aircraft Ltd. / Croplease PLC.										
NDN6 Fieldmaster			40-175	RA164-21100*	30-149	RA066-06800	12	RA177-01600	RA068-01600	
The New Piper Aircraft, Inc. - see Piper										
New Zealand Aerospace Ind. - see Pacific Aerospace Corp.										
North American Rockwell - see Aero Commander or Rockwell										
Pacific Aerospace Corp., LTD / New Zealand Aerospace Ind. / Fletcher										
FU24 Fletcher FU24-950 FU24-954 FU24A-954	1978 and on		40-47		30-32C	RA066-10600	4		RA068-01100	
08-600 Cresco			40-101	RA164-03006	30-69E	RA066-10600	6	RA105-00200		RA063-01300
CTi4E Airliner	S/N 200 and on		40-97F	RA164-02601	30-63G	RA066-10500	4	RA105-00200		RA063-01200
DT4			40-97F	RA164-02601	30-63S	RA066-10500	4	RA105-00200		RA063-01200
PAC 750XL			40-179A	RA164-03006	30-182	RA066-10600	8	RA105-00200	RA068-02600	RA063-02500 RA073-08500 RA073-08502
	Lining upgrade Pressure Plate Assy. >* Pressure Plate Assy. >*	199-281	40-179A	RA164-03006	30-182A	RA066-15300	8	RA177-00300	RA068-02600	RA063-02500 RA073-08500 RA073-08502
Partenavia - see Vulcanair or G.A.F.										
Pilatus Aircraft Ltd										
PC-12/47E PC-12, PC-12/45, PC-12/47, PC-12/47E	OH Kit - RA199-575A With Cleveland Conv. Drive Key RA206-05201	199-276	40-42A	RA158-07400 (rotor disc)	30-244	RA109-03000 (wear pad)				
Pilatus Britten-Norman - see Britten Norman										
Piper / The New Piper Aircraft, Inc.										
J-3 Cub	see Univair									
PA-11 Cub Special	see Univair									
PA-12 Super Cruiser	see Univair									
PA-14 Family Cruiser	see Univair									
PA-16 Clipper	see Univair									
PA-18 Super Cub	see Univair									
PA-18-150 Super Cub, PA-18A-150 Super Cub	18-7609137 & on		40-60	RA164-06700	30-60, -60A, -60B	RA066-10600	4	RA105-00200		
PA-22-108 Colt			40-28	RA164-00500	30-18	RA066-10600	2	RA105-00200		
PA-22-125, -135, -150, -160	Univair STC SA81AL	199-276	40-28	RA164-00500	30-18	RA066-10600	2	RA105-00200		

253-848-9349
SpencerAircraft.com

Spencer Aircraft provides the information in this catalog for its customers as a ***reference only*** and it is not intended for design or guarantee of accuracy. Though it is our policy to ship all orders in a timely manner, Spencer Aircraft cannot guarantee that all items will be in stock at all times.

Manufacturer Model	Year / Serial Number Notes	Conv/Mod Kit #	Wheel Assembly	Brake Disc	Brake Assembly	Lining	Linings Per Wheel	Rivet or Mounting Pin	Shim Insulators	Pressure Plate
PA-23-150, -160 Apache			3080A	-	3000-500 (-13)	RA066-10600	4	RA105-00200		
PA-23-235 Apache	27-1 thru 27-3737		3080B	RA164-00200	37-200-2	RA066-10600	8	RA105-00200		
PA-23 Series Aztec	Conversion Kit, 7.00-6	199-83	40-131	RA164-05700	30-86	RA066-06200	8	RA177-00300	RA068-01100	RA063-01100
PA-23-250 Aztec	27-3738 thru 27-7554137, 27-7554139, 27-7554141 thru 27-7554149		3080D	RA164-03200	37-200A (30-1)	RA066-06500 (PP) RA066-06200 (BP)	4 4	RA177-00300 RA177-00300		
	27-7554138		40-131	RA164-05700	30-86	RA066-06200	8	RA177-00300	RA068-01100	RA063-01100
PA-24-180, -250, -260 Comanche SB7100	24-1 thru 24-3295		3070 (40-5)	RA164-00900	3000-250,30-12	RA066-10600	4	RA105-00200		
	24-3296 thru 24-3306		3070 (40-5)	RA164-00900	30-41, -41B	RA066-10600	4	RA105-00200		
	24-3307 and on		40-68	RA164-00900	30-41, -41B	RA066-10600	4	RA105-00200		
			40-84	RA164-01900	30-41B	RA066-10600	4	RA105-00200		
PA-24-400 Comanche	24-130 and on		40-90	RA164-02201	30-23	RA066-06500 (PP) RA066-06200 (BP)	3 2	RA177-00300 RA177-00300	RA068-02800	
PA-25-235, Pawnee w/SB7150	25-1 thru 25-1999		3070 (40-5)	RA164-00900	3000-250,30-12	RA066-10600	4	RA105-00200		
PA-25-235	25-2000 thru 25-2136		40-61	RA164-01300	3000-250,30-12	RA066-10600	4	RA105-00200		
PA-25-235B	25-2137 thru 25-4171		40-61	RA164-01300	30-41, -41B	RA066-10600	4	RA105-00200		
PA-25-235C, D	25-4172 thru 25-7656119		40-84A	RA164-03300	30-41, -41B	RA066-10600	4	RA105-00200		
PA-25-260C, D	25-7656120 and on		40-84A	RA164-03300	30-41B	RA066-10600	4	RA105-00200		
PA-28-140 Cherokee/Cruiser	28-20002 thru 28-20520		40-28	RA164-00500	30-18	RA066-10500	2	RA105-00200		
	28-20521and on		40-86	RA164-02000	30-55	RA066-10500	2	RA105-00200		RA063-01200
	1974 and on		40-86B	RA164-02000	30-55	RA066-10500	2	RA105-00200		RA063-01200
PA-28-150 Cherokee	28-1 thru 28-1760		40-28	RA164-00500	30-18	RA066-10600	2	RA105-00200		
	28-1761 and on		40-86	RA164-02000	30-55	RA066-10500	2	RA105-00200		RA063-01200
PA-28-151 Cherokee/Warrior	All, 1974 and on		40-86B	RA164-02000	30-55	RA066-10500	2	RA105-00200		RA063-01200
PA-28-160 Cherokee	28-1 thru 28-1760		40-28	RA164-00500	30-18	RA066-10600	2	RA105-00200		
	28-1761 and on		40-86	RA164-02000	30-55	RA066-10500	2	RA105-00200		RA063-01200
PA-28-161 Cherokee/ Warrior II	7716001 and on		40-86B	RA164-02000	30-55	RA066-10500	2	RA105-00200		RA063-01200
PA-28-180 Cherokee/Archer	28-1 thru 28-1760		40-28	RA164-00500	30-18	RA066-10600	2	RA105-00200		
	28-1761 and on		40-86	RA164-02000	30-55	RA066-10500	2	RA105-00200		RA063-01200
	1974 and on		40-86B	RA164-02000	30-55	RA066-10500	2	RA105-00200		RA063-01200
PA-28-181 Cherokee/Archer II	28-7690001 and on		40-86B	RA164-02000	30-55	RA066-10500	2	RA105-00200		RA063-01200
PA-28-235 Cherokee 235/Pathfinder	28-10003 thru 28-10486		40-58	RA164-00900	30-34	RA066-11100	2	RA105-00200		
	28-10487 and on		40-86, 40-86B	RA164-02000	30-55	RA066-10500	2	RA105-00200		RA063-01200
PA-28-236 Dakota	28-7911001 and on		40-86B	RA164-02000	30-55	RA066-10500	2	RA105-00200		RA063-01200
	28-7911001 and on, HD		40-90A	RA164-02300	30-65	RA066-10500	4	RA105-00200		RA063-01200
PA-28R-180 Cherokee/Arrow 180	28R-30003 thru 28R-7130005		40-84	RA164-01900	30-41, -41B	RA066-10600	4	RA105-00200		
	28R-7130006 and on		40-86	RA164-02000	30-55	RA066-10600	2	RA105-00200		RA063-01200
	1974 and on		40-86B	RA164-02000	30-55	RA066-10600	2	RA105-00200		RA063-01200
	1977 and on		40-86B	RA164-02000	30-55	RA066-10600	2	RA105-00200		RA063-01200
PA-28R-200 Cherokee/Arrow 200	28R-35001 thru 28R-7135109		40-84	RA164-01900	30-41, -41B	RA066-10600	2	RA105-00200		
	28R-7135110 and on		40-86	RA164-02000	30-55	RA066-10500	2	RA105-00200		RA063-01200
	1974 and on		40-86B	RA164-02000	30-55	RA066-10500	2	RA105-00200		RA063-01200
	1977 and on		40-86B	RA164-02000	30-55	RA066-10500	2	RA105-00200		RA063-01200
PA-28-201T, PA-28R-201, PA-28RT-201, PA-28R-201T			40-86B	RA164-02000	30-55	RA066-10500	2	RA105-00200		RA063-01200
PA-30 Twin Comanche	30-2 thru 30-845		40-34	RA164-01000	30-23	RA066-06500 (PP) RA066-06200 (BP)	2 2	RA177-00300 RA177-00300	RA068-01100	
	30-845 and on		40-90	RA164-02201	30-23	RA066-06500 (PP) RA066-06200 (BP)	3 2	RA177-00300 RA177-00300	RA068-01100	
Twin Comanche Also see PA-39										
PA-31, PA-31-300, PA-31-325, PA31-350	Conversion Kit, 6.50-10	199-100	40-102	RA164-07700	30-138	RA066-06800	8	RA177-01600		
PA-31-300, PA-31-310 Navajo	31-5 thru 31-7300962		40-102	RA164-03600	30-88	RA066-03300	8	RA177-00400	RA068-01600	
PA-31-310, PA-31-325, PA31-350	Conversion Kit, 6.50-10	199-86	40-130	RA164-07900	30-95A	RA066-06600	8	RA177-01600	RA068-02800	
PA-31-325 Navajo C/R	31-7300963 and on		40-102A	RA164-04600	30-88A, -88B	RA066-03300	8	RA177-00400	RA068-01600	
PA-31-350 Chieftain	31-5001 thru 31-7652075, HD		40-102A	RA164-04600	30-88A, -88B	RA066-03300	8	RA177-00400	RA068-01600	
	31-7812001 and on		40-130	RA164-07900	30-95A	RA066-06600	8	RA177-01600	RA068-02800	
	31-7652076 and on		40-130	RA164-07900	30-95, -95A	RA066-06600	8	RA177-01600	RA068-02800	
PA-31-350	Conversion Kit, 6.50-10	199-119	40-105	RA164-21900	30-158	RA066-06800	8	RA177-01600	RA068-03100	
PA-31P (425 HP), PA-31-350	Conversion Kit, 6.50-10	199-83	40-141	RA164-07700	30-123	RA066-06800	12	RA177-01600		
T-1020			40-130	RA164-07900	30-95A	RA066-06600	8	RA177-01600		
	Heavy Duty		40-141	RA164-07700	30-123	RA066-06800	12	RA177-01600		
PA-31T Cheyenne I, IA, II	31-7800015 and on		40-106	RA164-03900	30-106	RA066-06800	16	RA177-01600	RA068-03100	
			40-106A	RA164-03900	30-106	RA066-06800	16	RA177-01600	RA068-03100	
PA-31T, PA-31T1	Conversion Kit, 6.50-10	199-89	40-106	RA164-03900	30-106	RA066-06800	16	RA177-01600	RA068-03100	
PA-31T2	Conversion Kit, 6.50-10	199-111	40-167	RA164-20600	30-142	RA066-07300	8	RA177-01600		
T-1040			40-167	RA164-20600	30-142	RA066-07300	8	RA177-01600		

Spencer Aircraft provides the information in this catalog for its customers as a ***reference only*** and it is not intended for design or guarantee of accuracy. Though it is our policy to ship all orders in a timely manner, Spencer Aircraft cannot guarantee that all items will be in stock at all times.

Manufacturer Model	Year / Serial Number Notes	Conv/Mod Kit #	Wheel Assembly	Brake Disc	Brake Assembly	Lining	Linings Per Wheel	Rivet or Mounting Pin	Stem Insulators	Pressure Plate
PA-32-260 Cherokee Six "260"	32-1 and on		40-90	RA164-02201	30-65	RA066-10600	4	RA105-00200		RA063-01100
	1974 and on		40-90A	RA164-02300	30-65	RA066-10500	4	RA105-00200		RA063-01100
	All / Heavy Duty Option		40-120	RA164-21600	30-83	RA066-06200	4	RA177-00300	RA068-01100	RA063-01100
PA-32-300 Cherokee Six "300"	32-40000 and on		40-90	RA164-02201	30-65	RA066-10500	4	RA105-00200		RA063-01100
	1974 and on		40-90A	RA164-02300	30-65	RA066-10500	4	RA105-00200		RA063-01100
	All / Heavy Duty Option		40-120	RA164-21600	30-83	RA066-06200	4	RA177-00300	RA068-01100	RA063-01100
PA-32R-300 Cherokee Lance	1976 and on		40-90A	RA164-02300	30-65	RA066-10500	4	RA105-00200		RA063-01100
	Heavy Duty Option		40-120	RA164-21600	30-83	RA066-06200	4	RA177-00300	RA068-01100	RA063-01100
PA-32RT-300 Lance II	7685002 and on		40-90A	RA164-02300	30-65	RA066-10500	4	RA105-00200		RA063-01100
	Heavy Duty Option		40-120	RA164-21600	30-83	RA066-06200	4	RA177-00300	RA068-01100	RA063-01100
PA-32RT-300T Turbo Lance II	7687001 and on		40-90A	RA164-02300	30-65	RA066-10500	4	RA105-00200		RA063-01100
	Heavy Duty Option		40-120	RA164-21600	30-83	RA066-06200	4	RA177-00300	RA068-01100	RA063-01100
PA-32-301, 301T Saratoga and SP Series			40-90A	RA164-02300	30-65	RA066-10500	4	RA105-00200		RA063-01100
	Heavy Duty Option		40-120C	RA164-21600	30-83A	RA066-06200	4	RA177-00300	RA068-01100	RA063-01100
PA-34-200 Seneca	7250001 and on		40-90	RA164-02201	30-65	RA066-10500	4	RA105-00200		RA063-01100
	1974 and on		40-90A	RA164-02300	30-65	RA066-10500	4	RA105-00200		RA063-01100
	Heavy Duty Option		40-120	RA164-21600	30-83	RA066-06200	4	RA177-00300	RA068-01100	RA063-01100
PA-34-200T Seneca II	7250001 and on		40-90A	RA164-02300	30-65	RA066-10500	4	RA105-00200		RA063-01100
	Heavy Duty Option		40-120	RA164-21600	30-83	RA066-06200	4	RA177-00300	RA068-01100	RA063-01100
PA-34-220T Seneca III, IV			40-90A	RA164-02300	30-65	RA066-10500	4	RA105-00200		RA063-01100
	Heavy Duty Option		40-120C	RA164-21600	30-83A	RA066-06200	4	RA177-00300	RA068-01100	RA063-01100
PA-36 Pawnee Brave			40-101	RA164-03006	30-67B	RA066-10600	4	RA105-00200		
PA-38-112 Tomahawk	5.00-5 Tire		40-78B	RA164-01700	30-9, 9B	RA066-10600	2	RA105-00200		
	9.00-6 Tire		40-59D	RA164-06900	30-53A	RA066-11200	2	RA105-00200		
PA-39 Twin Comanche			40-90	RA164-02201	30-23	RA066-06500 (PP) RA066-06200 (SP)	2 2	RA177-00300 RA177-00300		
Twin Comanche Also see PA-30										
PA-42 Cheyenne III, PA-42-720 IIIA	Conversion Kit, 6.50-10	199-112	40-166	RA164-07400	30-141	RA066-07300	8	RA177-01600		
PA-44-180 Seminole	7995001 and on		40-90A	RA164-02300	30-65	RA066-10500	4	RA105-00200		RA063-01100
			40-120 (HD)	RA164-21600	30-83	RA066-06200	4	RA177-00300	RA068-01100	RA063-01100
PA-44-180T	1 and on		40-120 (HD)	RA164-21600	30-83	RA066-06200	4	RA177-00300	RA068-01100	RA063-01100
PA-46-310P Malibu, -350P Mirage			40-120C	RA164-21600	30-83A	RA066-06200	4	RA177-00300	RA068-01100	RA063-01100
PA-46-500 Meridian			40-142	RA164-07800	30-127D	RA066-06200	4	RA177-00300	RA068-01100	
PA-46-500TP Meridian			40-142	RA164-07800	30-127D	RA066-06200	4	RA177-00300	RA068-01100	
PA-600, -700 Series - see Aerostar										
Pitts - see Aviat										
Quest Aircraft Company										
Kodiak 100			40-179	RA164-22201	30-182	RA066-03300	8	RA177-00300	RA068-02800	RA063-02500 RA073-08500 RA073-08502
	Lining upgrade Pressure Plate Assy. > Pressure Plate Assy. >	199-281	40-179	RA164-22201	30-182A	RA066-15300	8	RA177-00300	RA068-02800	RA063-02500 RA073-08500 RA073-08502
RFB Rhein-Flugzeugbau GmbH - Subsidiary of MBB										
RFB 400/600 Fantrainer			40-96E	RA164-3504	30-61E	RA066-10500	4	RA105-00200		RA063-01100
Raytheon - see Beech										
Republic Seabee - See Sol Aircraft Corp.										
Rockwell International - Also see Grumann American (Single engine), Aero Commander (Twin Engine) or Thrush (Ag. Aircraft)										
112, 112A, B Alpine	1 thru 496		40-113A	RA164-04300	30-79	RA066-10500	2	RA105-00200		
	500 and on		40-75H	RA164-01501	30-52H	RA066-10600	4	RA105-00200		RA063-01100
112TC, 112TCA, 114, 114B Gran Turismo	13000 and on		40-75H	RA164-01501	30-52H	RA066-10600	4	RA105-00200		RA063-01100
Saab - USA										
MF1-15, MF1-17 Supporter AC, Mushshak			40-97-D	RA164-02601	30-63D, -63E	RA066-10500	2	RA105-00200		RA063-01200
Sadler Aircraft Corp.										
A-22 Lesa 18-100 OPV			40-78B	RA164-01700	30-9	RA066-10600	2	RA105-00200		
Schaefer Aircraft Modifications / Embraer - see Piper										
Schleicher										
ASW20, 21, 22, 23 Sailplane			40-78B	RA164-01700	30-9	RA066-10600	2	RA105-00200		
Schweitzer - also see Agcat										
SGS 1-34 Sailplane			OEM	OEM	30-9	RA066-10600	2	RA105-00200		
			OEM	OEM	30-63D	RA066-10600	2	RA105-00200		RA063-01200
1-36 Glider			40-78	RA164-01700	30-9	RA066-10600	2	RA105-00200		

253-848-9349
SpencerAircraft.com

Spencer Aircraft provides the information in this catalog for its customers as a ***reference only*** and it is not intended for design or guarantee of accuracy. Though it is our policy to ship all orders in a timely manner, Spencer Aircraft cannot guarantee that all items will be in stock at all times.

Manufacturer Model	Year / Serial Number Notes	Conv/Mod Kit #	Wheel Assembly	Brake Disc	Brake Assembly	Lining	Linings Per Wheel	Rivet or Mounting Pin	Shim Insulators	Pressure Plate
SIAI Marchetti										
SF.205			40-97E	RA164-02601	30-63M	RA085-10500	2	RA105-00200		RA063-01200
SF.260, SF.260C					30-9	RA085-10600	2	RA105-00200		
SF.260SW Sea Warrior			40-90A	RA164-02300	30-65A	RA085-10500	4	RA105-00200		RA063-01100
SF.600TP			40-75	RA164-01501	30-52P	RA085-10500	2	RA105-00200		RA063-01100
SiberJet - see Sino Swearingen										
Slingsby Aviation										
T67M260			40-86B, -86F	RA164-02000	30-55	RA085-10500	2	RA105-00200		RA063-01200
Socata - See Daher										
Sportavia / RFB										
RF6C/RS180			40-86A	RA164-02000	30-55B	RA085-10500	2	RA105-00200		RA063-01200
Stinson - see Univair										
Stol Aircraft Corp. / Republic										
UC-1 Twin Bee	Stol Aircraft Corp. mod		40-74	RA164-00700	30-51A	RA085-10600	4	RA105-00200		
Swearingen Aircraft / Fairchild / SiberJet										
SA26-AT, SA26-T	Conversion Kit, 8.50-10	199-150	40-170	RA164-20900	30-144A	RA085-09000	8	RA105-00200		
SJ-30	Drive Key PN: RA205-02900		40-259							
Taylorcraft										
F-19 Sportsman 100 F-21, F-21A Trainer/Sport F22			40-86	RA164-02000	30-55	RA085-10500	2	RA105-00200		RA063-01200
TECNAM										
P2002 Sierra, P2002 Sierra RG			40-78B	RA164-01700	30-9	RA085-10600	2	RA105-00200		
P2006T, P2006T MRI			40-49A	RA164-07500	30-59A	RA085-11200	2	RA105-00200		
P2008 US-LSA, P2008 JC			40-78B	RA164-01700	30-9	RA085-10600	2	RA105-00200		
P2030			40-59A	RA164-07500	30-59A	RA085-11200	2	RA105-00200		
Ted Smith Aerostar - see Aerostar										
The New Piper Aircraft Inc. - see Piper										
Textron see Beech or Cessna										
Thrush - also see Ayres, Marsh, or Rockwell										
T660P			40-278A	RA164-23002	30-210C	RA085-13100	8	RA105-06700		
Twin Commander - see Aero Commander										
Univair										
(Alon) Aircoupe A2, A2A	w/Cleveland Disc Brakes		40-97A	RA164-02601	30-63A	RA085-10500	2	RA105-00200		RA063-01200
(ERCO) Ercoupe 415-C, -CD, -D, -E, -G	w/Cleveland Disc Brakes		40-41	RA164-00300	30-30	RA085-10500	2	RA105-00200		RA063-01100
(Forney) Aircoupe F-1, F-1A	w/Cleveland Disc Brakes		40-41	RA164-00300	30-30	RA085-10500	2	RA105-00200		RA063-01100
(Mooney) M10 Cadet/Coupe	w/Cleveland Disc Brakes		40-97A	RA164-02601	30-63, -63A	RA085-10500	2	RA105-00200		RA063-01200
(Piper) J-3 Cub	w/Cleveland Brake STC		40-60, -60A	RA164-06700	30-60, -60A	RA085-10600	4	RA105-00200		
(Piper) PA-11 Cub Special	w/Cleveland Brake STC		40-60	RA164-06700	30-60, -60A	RA085-10600	4	RA105-00200		
(Piper) PA-12 Super Cruiser	w/Cleveland Brake STC		40-60	RA164-06700	30-60, -60A	RA085-10600	4	RA105-00200		
(Piper) PA-14 Family Cruiser	w/Cleveland Disc Brakes		40-60	RA164-06700	30-60, -60A	RA085-10600	4	RA105-00200		
(Piper) PA-16 Clipper	w/Cleveland Disc Brakes		40-60	RA164-06700	30-60, -60A	RA085-10600	4	RA105-00200		
(Piper) PA-18 Super Cub	w/Cleveland Disc Brakes		40-60	RA164-06700	30-60, -60A	RA085-10600	4	RA105-00200		
(Piper) PA-18 Super Cub	w/Cleveland - 1.5" axles		40-84	RA164-01900	30-41, -41B	RA085-10600	4	RA105-00200		
(Piper) PA-20 Piper Cub	w/Cleveland Disc Brakes		40-60	RA164-06700	30-60, -60A	RA085-10600	4	RA105-00200		
(Piper) PA-20 Piper Cub	w/Cleveland - 1.5" axles		40-84	RA164-01900	30-41, -41B	RA085-10600	4	RA105-00200		
(Piper) PA-20/22 Piper Cub	w/Cleveland - 1.5" axles		40-84	RA164-01900	30-41, -41B	RA085-10600	4	RA105-00200		
(Stinson) 108, 108-1, -2, -3, -5	w/Cleveland - 7.00-6 Tire		40-28	RA164-00500	30-18	RA085-10600	2	RA105-00200		
	w/Cleveland, early model		40-97E	RA164-02601	30-63Q	RA085-10500	2	RA105-00200		RA063-01200
Velmer										
L-70 Millrainer			40-75S, -75T	RA164-04800	30-52K	RA085-10500	4	RA105-00200		RA063-01100
L-90 TP Redigo			40-142	RA164-07500	30-127	RA085-06200	4	RA177-00300	RA068-01100	
Vorga										
2150A, 2180 Kachina			40-97E	RA164-02601	30-63E	RA085-10500	2	RA105-00200		RA063-01200

Manufacturer Model	Year / Serial Number Notes	Conv/Mod Kit #	Wheel Assembly	Brake Disc	Brake Assembly	Lining	Linings Per Wheel	Rivet or Mounting Pin	Shim Insulators	Pressure Plate
Viking Air Limited - see de Havilland										
Vulcanair / Partenavia / G.A.F.										
P.64B, P.66B Oscar	197D and on		40-28	RA164-02500	30-18	RA066-10600	2	RA135-00200		
P.68C-160, P.68T Charlie Trainer			40-66B	RA164-02000	30-55	RA066-10500	2	RA135-00200		RA063-01200
P.68, P.68B,			40-96E	RA164-02504	30-61E	RA066-10500	4	RA135-00200		RA063-01100
P.68C, P.68C-TC	Heavy Duty		40-162	RA164-07800	30-127	RA066-06200	4	RA177-00300	RA068-02500	
AP68TP300			40-163	RA164-26500	30-139	RA066-06200	8	RA177-00300	RA068-01100	RA063-01100
Waco - also see Classic Aircraft										
Meteor, Minerva, Vela			40-97A	RA164-02601	30-63A	RA066-10500	2	RA135-00200		RA063-01200
Wetherly										
201A, 201B, 201C, 620			40-101	RA164-03006	30-67D	RA066-10800	4	RA135-00200		
620	Heavy Duty Opt		40-101	RA164-03006	30-69B	RA066-10800	6	RA135-00200		RA063-01300
620A, 620TP			40-101E	RA164-03009	30-69B	RA066-10800	4	RA135-00200		RA063-01300
Wing Aircraft										
D-1 Deringer			40-84	RA164-01900	30-41B	RA066-10600	4	RA135-00200		

(PP) - Lining used on pressure plate, (BP) - Lining used on back plate, (HD) - Heavy Duty, N/A - Not Available
For reference only. For installation eligibility refer to the FAA-PMA Supplement.

112S19

30-9 Assembly

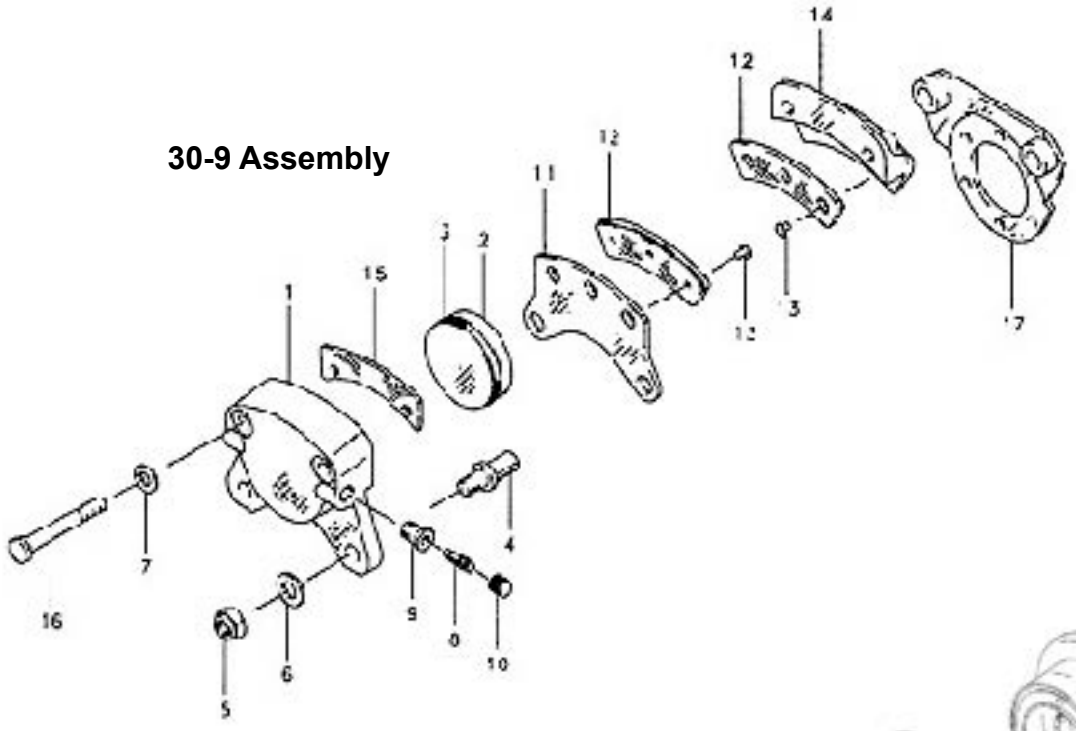

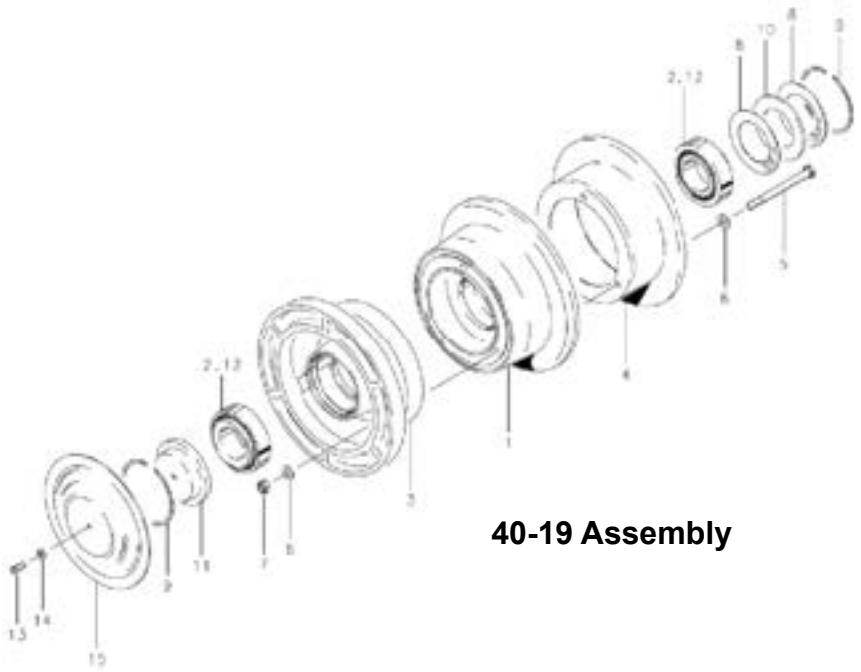

40-19 Assembly

253-848-9349
SpencerAircraft.com

Spencer Aircraft provides the information in this catalog for its customers as a ***reference only*** and it is not intended for design or guarantee of accuracy. Though it is our policy to ship all orders in a timely manner, Spencer Aircraft cannot guarantee that all items will be in stock at all times.

KIT PLANE BRAKE APPLICATION GUIDE

Aircraft Make and Model	Wheel Size, # Bolt Holes & Size	Brake Kit No.	Wheel Assembly	Brake Disc	Brake Assembly	Lining	Linings per Wheel	Rivet or Mounting Pin	Shim Insulator	Pressure Plate
Aircraft Designs										
Stallion	6.00-6, Three 5/16"	199-60	40-75B	RA164-01501	30-52	RA066-10500	4	RA105-00200		RA063-01100
American Homebuilts										
John Doe STOL	6.00-6, Three 5/16"	199-104C	40-59A	RA164-07500*	30-59A	RA066-11200		RA105-00200		
	6.00-6, Three 1/4"	199-105C	40-113K	RA164-04000	30-75X	RA066-10500	2	RA105-00200		RA063-01200
Aviation Maintenance Ltd.										
Stearman 75	8.50-10, Nine 1/4"	199-167	40-256	RA164-03006	30-195	RA066-10800	4	RA105-00200		
D and J Harmon										
Harmon Rocket	5.00-5, Three 1/4"	199-152	40-151	RA164-08500	30-133	RA066-10500	2	RA105-00200		RA063-01200
D.L.F. Holdings										
Tango	5.00-5, Three 1/4"	199-152	40-151	RA164-09900*	30-133	RA066-10500	2	RA105-00200		RA063-01200
Dean Wilson										
Whitney Boomerang	5.00-5, Three 1/4"	199-102	40-76B	RA164-01700	30-9	RA066-10600	2	RA105-00200		
Epic										
LT (Drive Key P/N: RA205-02900)			40-343							
Explorer Aeronautique										
Private Explorer Standard	6.00-6, Three 5/16"	199-62	40-75D	RA164-03601	30-52N	RA066-10500	4	RA105-00200		RA063-01100
Private Explorer Float Equipped	7.50-10, Three 1/4"		40-101	RA164-03006	30-67B	RA066-10800	4	RA105-00200		
Express Aircraft										
Express 2000 / 2000RG	6.00-6, Three 5/16"	199-60	40-75B	RA164-01501	30-52	RA066-10500	4	RA105-00200		RA063-01100
Four Winds Aircraft										
192 / 210 / 250T	6.00-6, Three 5/16"	199-60	40-75B	RA164-01501	30-52	RA066-10500	4	RA105-00200		RA063-01100
Hensley Aircraft										
F-19 Wolf Aerobatic	6.00-6, Three 5/16"	199-46	40-97A	RA164-02601	30-63A	RA066-10500	2	RA105-00200		RA063-01200
F-19 Wolf Utility	6.00-6, Three 5/16"	199-62	40-75B	RA164-01501	30-52	RA066-10500	4	RA105-00200		RA063-01100
Lancair										
Lancair IV Standard	6.00-6, Three 5/16"	199-208	40-96E	RA164-02504	30-61E	RA066-10500	4	RA105-00200		RA063-01100
Lancair IV High Energy	6.00-6, Three 5/16"	199-224	40-406	RA164-02504	30-233	RA066-06200	4	RA177-00300	RA068-01100	RA063-01100
Lancair IV High Energy Upgrade		199-224A			30-233	RA066-06200		RA177-00300	RA068-01100	RA063-01100
Legacy FG / RG, 2000	5.00-5, Three 1/4"	199-152	40-151	RA164-08500	30-133	RA066-10500	2	RA105-00200		RA063-01200
Murphy Manufacturing										
Rebel, SR2500 Supre Rebel, Maverick Renegade Spirit, Elite	6.00-6, Six 1/4"	199-71	40-60A	RA164-06700	30-60A	RA066-10600	4	RA105-00200		
Pacific Aerosystems										
Sky Aero	5.00-5, Three 1/4"	199-102	40-76B	RA164-01700	30-9	RA066-10600	2	RA105-00200		
F300	6.00-6, Three 5/16"	199-60A	40-75B	RA164-01501	30-52N	RA066-10500	4	RA105-00200		RA063-01100
Performance Aircraft										
Legend	6.00-6, Three 5/16"		40-96E	RA164-02504	30-61E	RA066-10500	4	RA105-00200		RA063-01100
Pitts										
S1-C, S1-S (Pitts Special)	5.00-5, Three 1/4"	199-102	40-76B	RA164-01700	30-9	RA066-10600	2	RA105-00200		
	5.00-5, Three 1/4"	199-103	40-76J	RA164-01700	30-9C	RA066-10600	2	RA105-00200		
Rans										
S-7C	6.00-6, Three 5/16"	199-104	40-59A	RA164-07500*	30-59A	RA066-11200	2	RA105-00200		
	6.00-6	199-204	40-281		30-214	RA066-10500	2	RA105-00200		RA063-01200
S-16	5.00-5, Three 1/4"	199-102	40-76B	RA164-01700	30-9	RA066-10600	2	RA105-00200		
SkyStar Aircraft										
Kit Fox	6.00-6	199-215	40-281		30-224	RA066-10500	2	RA105-00200		RA063-01200
Pulsar	5.00-5, Three 1/4"	199-102	40-76B	RA164-01700	30-9	RA066-10600	2	RA105-00200		
Steen Aero Lab										
Skybolt	6.00-6, Three 5/16"	199-104	40-59A	RA164-07500*	30-59A	RA066-11200	2	RA105-00200		
	6.00-6, Three 1/4"	199-105	40-113K	RA164-04000	30-75X	RA066-10500	2	RA105-00200		RA063-01200
Stolp Starduster										
SA-100, SA-101, SA-300,	5.00-5, Three 1/4"	199-103	40-76J	RA164-01700	30-9C	RA066-10600	2	RA105-00200		
SA-500, SA-750, SA-900	6.00-6, Three 5/16"	199-104	40-59A	RA164-07500*	30-59A	RA066-11200	2	RA105-00200		
Ultravia Aero Infl										
Pelican PL912/914	5.00-5, Three 1/4"	199-102	40-76B	RA164-01700	30-9	RA066-10600	2	RA105-00200		
Vans Aircraft										
RV-3 thru RV-9	5.00-5, Three 1/4"	199-102	40-76B	RA164-01700	30-9	RA066-10600	2	RA105-00200		
RV10	6.00-6, Three 5/16"	199-104	40-59A	RA164-07500*	30-59A	RA066-11200	2	RA105-00200		
Velocity Aircraft										
SE / XL	6.00-6, Three 5/16"	199-60	40-75B	RA164-01501	30-52	RA066-10500	4	RA105-00200		RA063-01100
Wag Aero										
Sport Trainer, Observer,	5.00-5, Three 1/4"	199-102	40-76B	RA164-01700	30-9	RA066-10600	2	RA105-00200		
Acro Trainer, Acro Sport I & II,	5.00-5, Three 1/4"	199-103	40-76J	RA164-01700	30-9C	RA066-10600	2	RA105-00200		
Wag-a-bond Classic, Super Sport,	6.00-6, Three 5/16"	199-104	40-59A	RA164-07500*	30-59A	RA066-11200	2	RA105-00200		
Wag-a-bond Traveler,	6.00-6, Three 1/4"	199-105	40-113K	RA164-04000	30-75X	RA066-10500	2	RA105-00200		RA063-01200
Sportsman 2+2, Wag-a bond										
Zenair										
6.00x6: CH-200, 250, 300 (Tri-Z),	5.00-5, Three 1/4"	199-102	40-76B	RA164-01700	30-9	RA066-10600	2	RA105-00200		
Zipper, Cricket MC-15, Stol CH-701	6.00-6, Three 5/16"		40-59A	RA164-07500*						

* RA164-06900 and RA164-07500 are for used only on experimental or non U.S type certificated aircraft.

For reference only. For installation eligibility refer to the FAA-PMA Supplement.

KIT PLANE BRAKE APPLICATION GUIDE

Manufacturer Model	Wheel Size, # Bolt Holes & Size	Brake Kit No.	Wheel Assembly	Brake Disc	Brake Assembly	Lining	Linings per Wheel	Rivet or Mounting Pin	Shim Insulator	Pressure Plate
Experimental	6.00-6, Three 5/16"	199-60A	40-75B	RA164-01501	30-52N	RA066-10600	4	RA105-00200		RA063-01100
Experimental	6.00-6, Three 5/16"	199-25301	40-75B	RA164-01501	30-52	RA066-10600	4	RA105-00200		RA063-01100
Experimental	5.00-5, Three 1/4"	199-103	40-78A	RA164-01700	30-9C	RA066-10600	2	RA105-00200		
Experimental	5.00-5, Three 1/4"	199-102	40-78B	RA164-01700	30-9	RA066-10600	2	RA105-00200		
Experimental	5.00-5, Three 1/4"	199-103	40-78J	RA164-01700	30-9C	RA066-10600	2	RA105-00200		
Experimental	5.00-5, Three 1/4"	199-103	40-78J	RA164-01700	30-9C	RA066-10600	2	RA105-00200		
Experimental	5.00-5, Three 1/4"	199-152	40-151	RA164-08500	30-133	RA066-10600	2	RA105-00200		
Experimental	5.00-5, Three 1/4"	199-19700	40-151	RA164-08500	30-164	RA066-06200	2	RA177-00300		
Experimental	5.00-5, Three 1/4"	199-152A	40-151A	RA164-08500	30-133	RA066-10600	2	RA105-00200		
Experimental	5.00-5, Three 1/4"	199-93	40-230	RA164-09900*	30-181A	RA066-10600	2	RA105-00200		
Experimental	6.00-6, Three 5/16"	199-104	40-59A	RA164-07500*	30-59A	RA066-11200	2	RA105-00200		
Experimental	6.00-6, Three 5/16"	199-104C	40-59A	RA164-07500*	30-59A	RA066-11200	2	RA105-00200		
Experimental	6.00-6, Six 1/4"	199-71	40-60A	RA164-06700	30-60A	RA066-10600	4	RA105-00200		
Experimental	6.00-6, Three 5/16"	199-60	40-75B	RA164-01501	30-52	RA066-10600	4	RA105-00200		RA063-01100
Experimental	6.00-6, Three 5/16"	199-62	40-75D	RA164-03601	30-52N	RA066-10600	4	RA105-00200		RA063-01100
Experimental	6.00-6, Three 5/16"	199-206	40-96E	RA164-02504	30-61E	RA066-10600	4	RA105-00200		RA063-01100
Experimental	6.00-6, Three 5/16"	199-46	40-97A	RA164-02601	30-63A	RA066-10600	2	RA105-00200		RA063-01200
Experimental	6.00-6 Three 1/4"	199-105C	40-113X	RA164-04000	30-75X	RA066-10600	2	RA105-00200		
Experimental	6.00-6, Three 5/16"	199-224	40-406	RA164-02504	30-233	RA066-06200	4	RA177-00300	RA068-01100	RA063-01100
Experimental	6.00-6, Three 1/4"	199-08400	40-113	RA164-04000	30-75	RA066-10600	2	RA105-00200		
Experimental	6.00-6, Three 1/4"	199-08401	40-113	RA164-04000	30-75A	RA066-10600	2	RA105-00200		
Experimental	6.00-6, Six 1/4"	199-20400	40-281		30-214	RA066-10600	2	RA105-00200		
Experimental	6.00-6, Six 1/4"	199-22300	40-281		30-214B	RA066-10600	2	RA105-00200		
Experimental	6., 7., or 8.00-6, Six 1/4"	199-251	40-281		30-224	RA066-10600	2	RA105-00200		

* RA164-09900 and RA164-07500 are for used only on experimental or non U.S type certificated aircraft.

For reference only.

Manufacturer Model	Year / Serial Number Notes	Conv/Mod Kit #	Wheel Assembly	Brake Disc	Brake Assembly	Lining	Linings Per Wheel	Rivet or Mounting Pin	Shim Insulators	Pressure Plate
Aerocet										
3500 Series			40-418A 40-118C		30-241	RA066-10600	4	RA105-00200		RA063-01100
Baumann Floats										
BF2150 BF2550			40-78A	RA164-01700	30-9C	RA066-10600	2	RA105-00200		
BF2750			40-481A		30-241	RA066-10600	4	RA105-00200		RA063-01100
Wipaire										
2100/2150 Series 3700/4000 Series			40-78A 40-78J	RA164-01700	30-9C	RA066-10600	2	RA105-00200		
3000/3450 Series 6000/6000/8750 Series			40-418 40-118B		30-241	RA066-10600	4	RA105-00200		RA063-01100
10000/13000 Series			40-101 40-101D	RA164-03006	30-67C	RA066-10600	4	RA105-00200		
Floatplane - Conversion Floats										
Edo										
	6.00-6		40-74		30-51	RA066-10600	4	RA105-00200		
	6.00-6		40-74A		30-51	RA066-10600	4	RA105-00200		

For reference only.

253-848-9349
SpencerAircraft.com

Spencer Aircraft provides the information in this catalog for its customers as a ***reference only*** and it is not intended for design or guarantee of accuracy. Though it is our policy to ship all orders in a timely manner, Spencer Aircraft cannot guarantee that all items will be in stock at all times.

McCauley wheels are identified by their six spoke pattern. Cleveland wheels are solid having a solid dish like appearance. Always be sure to compare your disc with the dimensional comparison guide at the end of this section.

McCauley Wheel Assembly P/N - Cross Reference To Brake Disc

Aircraft Model	Year	Bolt Holes	Overall Depth	McCauley Wheel Assy.	McCauley Brake Disc	RAPCO Brake Disc
150, A150, 152	1971 to 1973	6 - 1/4"		D-30063	B-30007 *	N/A
F150, F152	1973 to 1976	6 - 5/16"	2.070"	D-30260	B-30195	RA164-30195
FA152 (Reims)	1976	6 - 5/16"	2.070"	D-30580	B-30195	RA164-30195
	1976 to 1977	6 - 5/16"	1.965"	D-30291-6	B-30440	RA164-30440
	1977	3 - 5/16"	1.515"	D-30600-1	C-30615-1	RA164-30615-1
	1978 and on	3 - 5/16"	1.515"	D-30660-1	C-30615-1	RA164-30615-1
172, R172	1971 to 1973	6 - 1/4"		D-30063	B-30007*	N/A
F172 (Reims)	1973 to 1976	6 - 5/16"	2.070"	D-30260	B-30195	RA164-30195
FR172 (Reims)	1976	6 - 5/16"	2.070"	D-30580	B-30195	RA164-30195
	1977	3 - 5/16"	1.515"	D-30600-1	C-30615-1	RA164-30615-1
	1978 and on	3 - 5/16"	1.515"	D-30660-1	C-30615-1	RA164-30615-1
172RG Cutlass	1980 and on	3 - 5/16"	1.515"	D-30660-1	C-30615-1	RA164-30615-1
177, 177RG	1975	6 - 5/16"	2.070"	D-30580	B-30195	RA164-30195
F177RG	1976	6 - 5/16"	1.965"	D-30291-6	B-30440	RA164-30440
F177RG (Reims)	1977	3 - 5/16"	1.515"	D-30600-1	C-30615-1	RA164-30615-1
	1978 and on	3 - 5/16"	1.515"	D-30660-1	C-30615-1	RA164-30615-1
180 Series	1973 to 1974			D-30063-1		
Skywagon		6 - 5/16"	2.155"	D-30291-3	C-30414	RA164-30414
	1974			D-30063-4		
	1974 to 1978	6 - 5/16"	2.335"	D-30291-1	C-30388	RA164-30388
	1978 and on	3 - 5/16"	1.890"	D-30660-2	C-30615-2	RA164-30615-2
182 Series	1976	6 - 5/16"	1.965"	D-30291-6	B-30440	RA164-30440
F182 (Reims)	1977	3 - 5/16"	1.515"	D-30600-1	C-30615-1	RA164-30615-1
	1978 to 1980	3 - 5/16"	1.515"	D-30660-1	C-30615-1	RA164-30615-1
T182	1981 and on	3 - 5/16"	1.660"	D-30660-3	C-30615-3	RA164-30615-3
185 Series	1973 to 1974			D-30063-1		
Skywagon		6 - 5/16"	2.155"	D-30291-3	C-30414	RA164-30414
	1974			D-30063-4		
	1974 to 1978	6 - 5/16"	2.335"	D-30291-1	C-30388	RA164-30388
	1978 and on	3 - 5/16"	1.890"	D-30660-2	C-30615-2	RA164-30615-2
206 Series	1974			D-30063-2		
	1974 to 1978	6 - 5/16"	2.100"	D-30291-2	C-30398	RA164-30398
	1978 and on	3 - 5/16"	1.660"	D-30660-3	C-30615-3	RA164-30615-3
	1974			D-30063-4		
	1974 to 1978 (8.00x6)	6 - 5/16"	2.335"	D-30291-1	C-30388	RA164-30388
	1978 and on (8.00x6)	3 - 5/16"	1.890"	D-30660-2	C-30615-2	RA164-30615-2
210 Series	1974			D-30063-2		
	1974 to 1978	6 - 5/16"	2.100"	D-30291-2	C-30398	RA164-30398
	1978 and on	3 - 5/16"	1.660"	D-30660-3	C-30615-3	RA164-30615-3

*McCauley Brake Disc P/N: B-30007 with Six mounting holes for 1/4" bolts. Try web search.

For reference only.

Spencer Aircraft provides the information in this catalog for its customers as a ***reference only*** and it is not intended for design or guarantee of accuracy. Though it is our policy to ship all orders in a timely manner, Spencer Aircraft cannot guarantee that all items will be in stock at all times.

Brake Disc		Specifications						Wheel Assemblies With Which Disc is Used In	
RAPCO Disc PN	McCauley Disc PN	Bolt Hole, Quantity & Size	Overall Depth	Overall Diameter	OD Base	Wear Surface Thickness	Minimum Wear Thickness	McCauley Wheel Assembly PN	Cessna Wheel Assembly PN
N/A	B-30007	6 Hole, (1/4")						D-30063	C163002-0101
RA164-30195	B-30195	6 Hole, 0.320 (5/16")	2.070"	7.495"	5.490"	0.225"	0.190"	D-30280 or D-30580	C163003-0101 or C163003-0102
RA164-30388	C-30388	6 Hole, 0.320 (5/16")	2.335"	7.495"	5.490"	0.355"	0.325"	D-30291-1 or -5	C163004-0101
RA164-30398	C-30398	6 Hole, 0.320 (5/16")	2.100"	7.495"	5.490"	0.355"	0.325"	D-30291-2	C163004-0102 or C163006-0103
RA164-30414	C-30414	6 Hole, 0.320 (5/16")	2.155"	7.495"	5.490"	0.355"	0.325"	D-30291-3	C163004-0103
RA164-30440	B-30440	6 Hole, 0.320 (5/16")	1.985"	7.495"	5.490"	0.215"	0.190"	D-30291-4 or -6	C163004-0104
RA164-30615-1	C-30615-1 or -4	3 Hole, 0.320 (5/16")	1.515"	7.495"	5.485"	0.215"	0.190"	D-30660-1	C163005-0101 or C163006-0101
RA164-30615-2	C-30615-2	3 Hole, 0.320 (5/16")	1.890"	7.495"	5.500"	0.355"	0.330"	D-30660-2	C163006-0102
RA164-30615-3	C-30615-3	3 Hole, 0.320 (5/16")	1.660"	7.495"	5.500"	0.355"	0.330"	D-30660-3	C163006-0103

For reference only. For installation eligibility refer to the FAA-PMA Supplement.

OIL ANALYSIS KITS AVAILABLE





TOOL KITS AVAILABLE







HARDWARE KITS AVAILABLE

253-848-9349
SpencerAircraft.com

Spencer Aircraft provides the information in this catalog for its customers as a ***reference only*** and it is not intended for design or guarantee of accuracy. Though it is our policy to ship all orders in a timely manner, Spencer Aircraft cannot guarantee that all items will be in stock at all times.

Cessna Wheel Assembly P/N - Cross Reference To Brake Disc

Cessna Model	Bolt Hole Quantity,	Overall Depth	Cessna Wheel Assy.	McCauley Brake Disc	RAPCO Brake Disc
150, 150A	Six, 5/16"	1.965"	C163004-0104	B-30440	RA164-30440
	Six, 5/16"	2.070"	C163003-0101 or C163003-0102	B-30195	RA164-30195
	Six, 1/4"		C163002-0101	B-30007	N/A
152, A152, F152, FA152	Three, 5/16"	1.515"	C163005-0101 or C163006-0101	C-30615-1	RA164-30615-1
172, F172, R172, FR172	Six, 5/16"	1.965"	C163004-0104	B-30440	RA164-30440
	Six, 5/16"	2.070"	C163003-0101 or C163003-0102 or C163004-0104	B-30195	RA164-30195
	Six, 1/4"		C163002-0101	B-30007	N/A
172, F172, 172RG	Three, 5/16"	1.515"	C163006-0101	C-30615-1	RA164-30615-1
177	Three, 5/16"	1.515"	C163005-0101	C-30615-1	RA164-30615-1
177RG	Three, 5/16"	1.515"	C163005-0101 or C163006-0101	C-30615-1	RA164-30615-1
180	Six, 5/16"	2.155"	C163004-0103	C-30414	RA164-30414
	Six, 5/16"	2.335"	C163004-0101	C-30388	RA164-30388
	Three, 5/16"	1.660"	C163006-0103 Std.	C-30615-3	RA164-30615-3
	Three, 5/16"	1.890"	C163006-0102 HD	C-30615-2	RA164-30615-2
182, F182	Three, 5/16"	1.515"	C163006-0101 C163006-0103	C-30615-1	RA164-30615-1
R182, FR182, TR182	Three, 5/16"	1.660"	C163006-0103	C-30615-3	RA164-30615-3
185	Six, 5/16"	2.155"	C163004-0103	C-30414	RA164-30414
	Six, 5/16"	2.335"	C163004-0101	C-30388	RA164-30388
	Three, 5/16"	1.660"	C163006-0103 Std.	C-30615-3	RA164-30615-3
	Three, 5/16"	1.890"	C163006-0102 HD	C-30615-2	RA164-30615-2
U206, TU206	Six, 5/16"	2.100"	C163004-0102	C-30398	RA164-30398
	Six, 5/16"	2.335"	C163004-0101	C-30388	RA164-30388
	Three, 5/16"	1.660"	C163006-0103 Std.	C-30615-3	RA164-30615-3
	Three, 5/16"	1.890"	C163006-0102 HD	C-30615-2	RA164-30615-2
210, T210, P210	Six, 5/16"	2.100"	C163006-0103	C-30398	RA164-30398
	Three, 5/16"	1.660"	C163006-0103	C-30615-3	RA164-30615-3

For reference only.

Spencer Aircraft provides the information in this catalog for its customers as a ***reference only*** and it is not intended for design or guarantee of accuracy. Though it is our policy to ship all orders in a timely manner, Spencer Aircraft cannot guarantee that all items will be in stock at all times.

CONSOLIDATED AIRCRAFT COATINGS

POLY FIBER Aircraft Coatings

Randolph Aircraft Products

POLY FIBER Aircraft Coatings



COVERING KIT



CECONITE

Spencer Aircraft is one of the largest distributors of Poly-Fiber, Randolph & Ceconite covering & coating products.

You can also have your paint colors mixed in house with our certified staff. We pride ourselves on our great customer service along with trained staff to answer all your technical questions about covering, coating or painting an experimental, certified fabric or metal aircraft.

Check our website at www.SpencerAircraft.com for all the covering supplies you'll need for your next big project!

Spencer Aircraft provides the information in this catalog for its customers as a ***reference only*** and it is not intended for design or guarantee of accuracy. Though it is our policy to ship all orders in a timely manner, Spencer Aircraft cannot guarantee that all items will be in stock at all times.

POLY-FIBER AIRCRAFT COATINGS

POLY TAK	MEK	RAND-O-PROOF G6302	286 THINNER	AEROTHANE	URETHANE REDUCER	URETHANE CATALYST
PINT	QUART	QUART	QUART	QUART	QUART	1/2 PINT
QUART	QUART	GALLON	GALLON	GALLON	QUART	QUART
GALLON	QUART					
POLY BRUSH	**65-75 / 8500 REDUCER**	**NON-TAUNTING BUTYRATE TAN W8350**	**9703 THINNER**	**RANTHANE**	**G4200**	**AUCAT2X1 CATALYST**
QUART	QUART	QUART	QUART	QUART	QUART	PINT
GALLON	QUART	GALLON	GALLON	GALLON	QUART X 2	QUART X 2
POLY SPRAY	**65-75 / 8500 REDUCER**	**RAND-O-FILL G6303**	**9703 THINNER**	**EPOXY EV-400 VARNISH**	**E-500 REDUCER**	**EV-410 CATALYST**
QUART	QUART	QUART	QUART	QUART	QUART	PINT
GALLON	QUART	GALLON	GALLON	GALLON	GALLON	QUART X 2
POLY-TONE	**65-75 / 8500 REDUCER**	**BUTYRATE**	**9703 REDUCER**	**EPOXY EP-420 PRIMER**	**E-500 REDUCER**	**EP-430 CATALYST**
QUART	QUART	QUART	QUART	QUART	QUART	PINT
GALLON	QUART	GALLON	GALLON	GALLON	GALLON	QUART X 2

	POLY - GALLONS							
YARDS	BRUSH	REDUCER	SPRAY	REDUCER	TONE	REDUCER	AERO	REDUCER
1	0.22	0.07	0.24	0.06	0.22	0.06	0.13	0.04
2	0.44	0.15	0.49	0.12	0.44	0.11	0.27	0.09
3	0.67	0.22	0.73	0.18	0.67	0.17	0.4	0.13
4	0.89	0.3	0.89	0.24	0.89	0.22	0.53	0.18
5	1.11	0.37	1.22	0.31	1.11	0.28	0.67	0.22
6	1.33	0.44	1.47	0.37	1.33	0.33	0.8	0.26
7	1.56	0.52	1.71	0.43	1.56	0.39	0.93	0.31
8	1.78	0.59	1.96	0.49	1.78	0.44	1.07	0.35
9	2	0.67	2.2	0.55	2	0.5	1.2	0.4
10	2.22	0.74	2.44	0.61	2.22	0.56	1.33	0.44
11	2.44	0.81	2.69	0.67	2.44	0.61	1.47	0.48
12	2.67	0.89	2.93	0.73	2.67	0.67	1.6	0.53
13	2.89	0.96	3.18	0.79	2.89	0.72	1.73	0.57
14	3.11	1.04	3.42	0.86	3.11	0.78	1.87	0.62
15	3.33	1.11	3.67	0.92	3.33	0.83	2	0.66
16	3.56	1.19	3.91	0.98	3.56	0.89	2.13	0.7
17	3.78	1.26	4.16	1.04	3.78	0.94	2.27	0.75
18	4	1.33	4.4	1.1	4	1	2.4	0.79
19	4.22	1.41	4.64	1.16	4.22	1.06	2.53	0.85
20	4.44	1.48	4.89	1.22	4.44	1.11	2.67	0.88
21	4.67	1.56	5.13	1.28	4.67	1.17	2.8	0.92
22	4.89	1.63	5.38	1.34	4.89	1.22	2.93	0.97
23	5.11	1.7	5.62	1.41	5.11	1.28	3.07	1.01
24	5.33	1.78	5.87	1.47	5.33	1.33	3.2	1.06
25	5.56	1.85	6.11	1.53	5.56	1.39	3.33	1.1
26	5.78	1.93	6.36	1.58	5.78	1.44	3.47	1.14
27	6	2	6.6	1.65	6	1.5	3.6	1.19
28	6.22	2.07	6.84	1.71	6.22	1.56	3.73	1.23
29	6.44	2.15	7.09	1.77	6.44	1.61	3.87	1.28
30	6.67	2.22	7.33	1.83	6.67	1.67	4	1.32
31	6.89	2.3	7.58	1.89	6.89	1.72	4.13	1.36
32	7.11	2.37	7.82	1.96	7.11	1.78	4.27	1.41
33	7.33	2.44	8.07	2.02	7.33	1.83	4.4	1.45
34	7.56	2.52	8.31	2.08	7.56	1.89	4.53	1.5
35	7.78	2.59	8.56	2.14	7.78	1.94	4.67	1.54
36	8	2.67	8.8	2.2	8	2	4.8	1.58
37	8.22	2.74	9.04	2.26	8.22	2.06	4.93	1.63
38	8.44	2.81	9.29	2.32	8.44	2.11	5.07	1.67
39	8.67	2.89	9.53	2.38	8.67	2.17	5.2	1.72
40	8.89	2.96	9.78	2.44	8.89	2.22	5.33	1.76
41	9.11	3.04	10.02	2.51	9.11	2.28	5.47	1.8
42	9.33	3.11	10.27	2.57	9.33	2.33	5.6	1.85
43	9.56	3.19	10.51	2.63	9.56	2.39	5.73	1.89
44	9.78	3.26	10.76	2.69	9.78	2.44	5.87	1.94
45	10	3.33	11	2.75	10	2.5	6	1.98
46	10.22	3.41	11.24	2.81	10.22	2.56	6.13	2.02
47	10.44	3.48	11.49	2.87	10.44	2.61	6.27	2.07
48	10.67	3.56	11.73	2.93	10.67	2.67	6.4	2.11
49	10.89	3.63	11.98	2.99	10.89	2.72	6.53	2.16
50	11.11	3.7	12.22	3.06	11.11	2.78	6.67	2.2

	POLY - GALLONS							
YARDS	BRUSH	REDUCER	SPRAY	REDUCER	TONE	REDUCER	AERO	REDUCER
51	11.33	3.78	12.47	3.12	11.33	2.83	6.8	2.24
52	11.56	3.85	12.71	3.18	11.56	2.89	6.93	2.29
53	11.78	3.93	12.96	3.24	11.78	2.94	7.07	2.33
54	12	4	13.2	3.3	12	3	7.2	2.38
55	12.22	4.07	13.44	3.36	12.22	3.06	7.33	2.42
56	12.44	4.15	13.69	3.42	12.44	3.11	7.47	2.46
57	12.64	4.22	13.93	3.48	12.64	3.17	7.6	2.51
58	12.89	4.3	14.18	3.54	12.89	3.22	7.73	2.55
59	13.11	4.37	14.42	3.61	13.11	3.28	7.87	2.6
60	13.33	4.44	14.67	3.67	13.33	3.33	8	2.64
61	13.56	4.52	14.91	3.73	13.56	3.39	8.13	2.68
62	13.78	4.59	15.16	3.79	13.78	3.44	8.27	2.73
63	14	4.67	15.4	3.85	14	3.5	8.4	2.77
64	14.22	4.74	15.64	3.91	14.22	3.56	8.53	2.82
65	14.44	4.81	15.89	3.97	14.44	3.61	8.67	2.86
66	14.67	4.89	16.13	4.03	14.67	3.67	8.8	2.9
67	14.89	4.96	16.38	4.09	14.89	3.72	8.93	2.95
68	15.11	5.04	16.62	4.16	15.11	3.78	9.07	2.99
69	15.33	5.11	16.87	4.22	15.33	3.83	9.2	3.04
70	15.56	5.19	17.11	4.28	15.56	3.89	9.33	3.08
71	15.78	5.26	17.36	4.34	15.78	3.94	9.47	3.12
72	16	5.33	17.6	4.4	16	4	9.6	3.17
73	16.22	5.41	17.84	4.46	16.22	4.06	9.73	3.21
74	16.44	5.48	18.09	4.52	16.44	4.11	9.87	3.26
75	16.67	5.56	18.33	4.58	16.67	4.17	10	3.3
76	16.89	5.63	18.58	4.64	16.89	4.22	10.13	3.34
77	17.11	5.7	18.82	4.71	17.11	4.28	10.27	3.39
78	17.33	5.78	19.07	4.77	17.33	4.33	10.4	3.43
79	17.56	5.85	19.31	4.83	17.56	4.39	10.53	3.48
80	17.78	5.93	19.56	4.89	17.78	4.44	10.67	3.52
81	18	6	19.8	4.95	18	4.5	10.8	3.56
82	18.22	6.07	20.04	5.01	18.22	4.56	10.93	3.61
83	18.44	6.15	20.29	5.07	18.44	4.61	11.07	3.65
84	18.67	6.22	20.53	5.13	18.67	4.67	11.2	3.7
85	18.89	6.3	20.78	5.19	18.89	4.72	11.33	3.74
86	19.11	6.37	21.02	5.26	19.11	4.78	11.47	3.78
87	19.33	6.44	21.27	5.32	19.33	4.83	11.6	3.83
88	19.56	6.52	21.51	5.38	19.56	4.89	11.73	3.87
89	19.78	6.59	21.76	5.44	19.78	4.94	11.87	3.92
90	20	6.67	22	5.5	20	5	12	3.96
91	20.22	6.74	22.24	5.56	20.22	5.06	12.13	4
92	20.44	6.81	22.49	5.62	20.44	5.11	12.27	4.05
93	20.67	6.89	22.73	5.68	20.67	5.17	12.4	4.09
94	20.89	6.96	22.98	5.74	20.89	5.22	12.53	4.14
95	21.11	7.04	23.22	5.81	21.11	5.28	12.67	4.18
96	21.33	7.11	23.47	5.87	21.33	5.33	12.8	4.22
97	21.56	7.19	23.71	5.93	21.56	5.39	12.93	4.27
98	21.78	7.26	23.96	5.99	21.78	5.44	13.07	4.31
99	22	7.33	24.2	6.05	22	5.5	13.2	4.36
100	22.22	7.41	24.44	6.11	22.22	5.56	13.33	4

Spencer Aircraft provides the information in this catalog for its customers as a ***reference only*** and it is not intended for design or guarantee of accuracy. Though it is our policy to ship all orders in a timely manner, Spencer Aircraft cannot guarantee that all items will be in stock at all times.

POLY-FIBER AIRCRAFT COATINGS

POLYESTER FABRIC

Part #	Style	Width Inches	Thread Count	Strength LB/Inch	Weight Oz Per Square Yard
1-Heavy	Heavy Duty	72	69 x 63	Avg 121	3.5 oz
1-Medium	Medium	72	60 x 60	Avg 110	3.16 oz
1-LightU	Light Uncertified	72	90 x 76	Avg 69	1.87 oz
1-Polypad	Polyester Padding	48	Non-Woven	-	-

PINKED EDGE POLYESTER LINEAR FINISHING TAPES		
1-Medium1	Medium	1” x 25 yd
1-Medium15	Medium	1.5” x 25 yd
1-Medium2x25	Medium	2” x 25 yd
1-Medium2	Medium	2” x 50 yd
1-Medium3	Medium	3” x 25 yd
1-Medium4	Medium	4” x 25 yd
1-Medium6	Medium	6” x 25 yd
1-Light1	Light	1” x 25 yd
1-Light15	Light	1.5” x 25 yd
1-Light2x25	Light	2” x 25 yd
1-Light2	Light	2” x 50 yd
1-Light3	Light	3” x 25 yd
1-Light4	Light	4” x 25 yd
1-Light6	Light	6” x 25 yd

POLY-FIBER SUB-COATINGS	
2-PT	Poly-Tak Adhesive
2-PB	Poly-Brush, Tinted or Untinted
2-PS	Poly-Spray

POLY-FIBER MARK II FOR METAL	
(See Color Card)	
18-(color no.)	4 Whites (Insignia, Juneau, Glacier, Daytona)
18-(color no.)	All Other Colors
18-MIL	Mark II Mixing Liquid
18-THINNER	Mark II Thinner



PINKED EDGE BIAS TAPES		
1-BIAS2	Bias	2” x 25 yd
1-BIAS3	Bias	3” x 25 yd
1-BIAS4	Bias	4” x 25 yd

REDUCERS	
2-65	R 65-75 Reducer
2-85	RR 8500 Reducer
2-86	Blush Retarder BR 8600
10-MEK	MEK (Methyl Ethyl Ketone)

POLY-TONE FINISHES	
(See Color Card #50)	
3-(color no.)	4 whites (Insignia, Juneau, Glacier, Daytona
3-(color no.)	All Other Colors

URETHANE VARNISH	
4-550	Urethane Varnish UV-550

URETHANE REDUCERS	
6-820	Urethane Reducer UE-820
6-826	Urethane Retarder UR-826

URETHANE CATALYST	
6-865	Urethane catalyst U-865

POLY-FIBER ENAMELS	
(See Color Card)	
15-(color no.)	4 Whites (Insignia, Juneau, Glacier, Daytona)
15-(color no.)	All Other Colors
15-ER	Enamel Reducer
15-EH	Enamel Hardener/Gloss Additive

AERO-THANE	
(See Color Card) (All Paint 3/4 Filled Cans)	
4-(color no.)	4 Whites (Insignia, Juneau, Glacier, Daytona)
4-(color no.)	All Other Colors
4-100	Clear Aero-Thane AO-100

INTER RIB BRACE TAPE	
Polyester Twill - 36 yd rolls	
1-IRT2	1/2” x 36 yd

REJUVENATOR	
2-RJ	RJ-1200 Rejuvenator

UV BLOCKER	
3-PTUV	UV Blocker (PT only)

POLYESTER THREAD & CORD		
Part #	**Style**	**Width Inches**
1-TM	Machine Sewing	500 yd
1-TH	Hand Sewing	250 yd
1-TS	Rib Lace Standard Round	400 yd
1-TF	Rib Lace Braided Flat	500 yd

RIB LACE REINFORCING TAPES	
Polyester-Adhesive coated 60 yd spools	
1-RT4	1/4” x 60 yd
1-RT3	3/8” x 60 yd
1-RT2	1/2” x 60 yd



FLATTENER	
3-PTUV, 4 ADFT	Flattener for Poly-Tone, Aero-Thane, Enamel& Mark II for Metal
15-ENFT	

EPOXY PRIMERS & VARNISH	
8-420G	EP-420 Primer, Dark Green
8-420W	EP-420 Primer, White
8-400	Epoxy Varnish EV-400

EPOXY REDUCERS	
8-500	Epoxy Reducer E-500
8-501	Epoxy Accelerator EX-501
8-502	Epoxy Retarder E-502

EPOXY CATALYST	
8-430	EP-430 Epoxy Primer Catalyst
8-410	EV-410 Epoxy Varnish Catalyst

Spencer Aircraft provides the information in this catalog for its customers as a ***reference only*** and it is not intended for design or guarantee of accuracy. Though it is our policy to ship all orders in a timely manner, Spencer Aircraft cannot guarantee that all items will be in stock at all times.

MISC. RECOVERING & FINISHING SUPPLIES	
12-IHC	Inspection Hole Covers
12-IHRR	Inspection Hole Reinforcing Rings
12-SG	Seaplane Grommets
12-PDG	Plastic Drain Grommets (100 per bag)
12-ADG	Aluminum Drain Grommets (100 per bag)
12-AW	2024-13 Aluminum Washers (100 per bag)
11-PP	Paint Paddles
11-PSC	Paint Strainer Cones (60x48)
12-BR	Blind Rib Rivets (100 per bag
12-BRC	Closed End Blind 1/8" Pop Rivet AD-41H (used to seal tubing vent holes)
11-SP280	280-Grit Sanding Paper, Wet or Dry
11-SP320	320-Grit Sanding Paper, Wet or Dry
11-400	400-Grit Sanding Paper, Wet or Dry
11-MTP	Crepe Paper Masking Tape 3M Y-231 (3/4" x 60 Yard Roll)
11-MTC	Cloth Anti-Chafe & Masking Tape
11-MTFL	Propylene Fine Line Masking Tape (3M #218, 3/4" X 60 Yard Roll)
11-THERMO3510	Iron Calibration Thermometer #3510
11-HEATSINK	Silicone Heat Sink Compound (1 ounce syringe)
11-CABLE	Control Cable Fairings (Thermo formed from white .055 A.B.S. Plastic 4"x2" Base x 3/4" High

EPOXY FILLER	
8-EF3/8-EF4	Sand-able Non-Shrinking Super-Fil Epoxy Filler

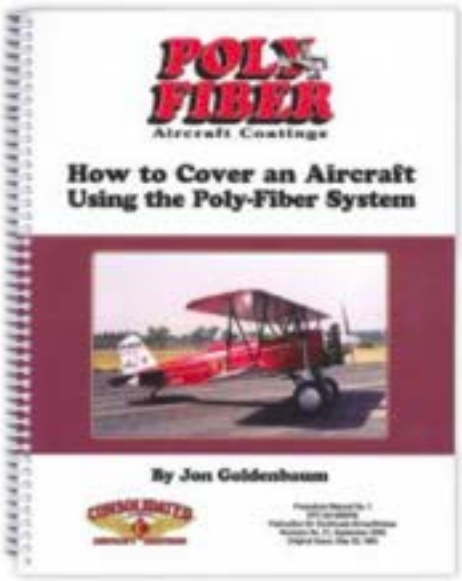

CLEANERS	
9-310	310 Alkaline Cleaner
2-2210	C-2210 Paint Surface Cleaner
7-2200	C-2200 Metl-Sol Metal Cleaner

SPECIAL REQUEST ITEMS	
11-PFMANUAL	Poly-Fiber "How to Cover An Aircraft Manual **(PDF ONLY)**
11-Video / 11-PFDVD	EAA Sportair "Aircraft Fabric Covering" Video in VHS or DVD
11-PAINTMAN	EAA "How to Paint Your Own Airplane" Manual
11-CCARD	Poly-Fiber Color Card No. 50
11-INTROKIT	Poly-Fiber Practice Kit

FLIGHT GLOSS COMPOSITE FINISHING SYSTEM	
16-SPU	UV Smooth Prime
16-PW	Prep Wipe
16-GC	Gun Cleaner
11-FGMAN	Flight Gloss Manual
11-FR4	4" Foam Roller
11-FREF4	4" Foam Refills (2 Pack)
11-FRTRAY4	4" Roller Paint Tray
11-FR6	6" Foam Roller
11-FREF6	6" Foam Refills

CURVED SEWING NEEDLES	
11-CN3	3"
11-CN6	6"

RIB LACING NEEDLES	
11-RN12	12" Straight Tip
11-RNC12	12" Curved Tip
11-RN18	18" Straight Tip
11-RNC18	18" Curved Tip

SELF-TAPPING SCREWS, TRUSS HEAD, PHILLIPS HEAD	
12-SC44	#4 x 1/4" (100 per bag)

DOPE BRUSHES, GLUE & DOPE BRUSH WITH WOOD HANDLE	
11-DB1	1"
11-DB2	2"
11-DB3	3"
11-DB4	4"
11-GB1	Glue Brush, Metal Tubular Handle 1/2"

Spencer Aircraft provides the information in this catalog for its customers as a ***reference only*** and it is not intended for design or guarantee of accuracy. Though it is our policy to ship all orders in a timely manner, Spencer Aircraft cannot guarantee that all items will be in stock at all times.

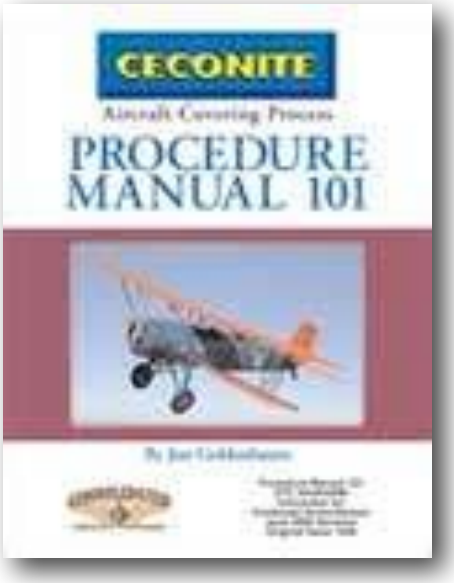

Manual	Part No.
Ceconite Procedure Manual 101	17-SSN3



CEMENT / NEW SUPER SEAM	
Quart	17-SSN3
Gallon	17-SSN4

INTER RIB BRACE TAPE	
Polyester Twill	
1/2” x 36 yd	17-IRT2

ANTI-CHAFE TAPE	
Cloth Anti-Chafe & Masking Tape	
1” x 60 yd	17-MTC

Polyester Fabric

Style	Part No.	Width Inches	Thread Count	Strength lb/Inch	Weight oz per sq yd
Ceconite 1010	17-C101	72	69x63	Avg 121	3.5 oz.
Ceconite 102	17-C102	72	60x60	Avg 110	3.16 oz.
Light, Uncertified	17-LIGHTU	72	90x76	Avg 69	1.87 oz.

Pinked Edge Polyester Linear Surface Tapes			
C102 1” x 25 yd	17-102P1	Light 1” x 25 yd	17-LIGHT1
C102 1.5” x 25 yd	17-102P15	Light 1.5” x 25 yd	17-LIGHT15
C102 2” x 25 yd	17-102P2X25	Light 2” x 25 yd	17-LIGHT2X25
C102 2” x 50 yd	17-102P2X50	Light 2” x 50 yd	17-LIGHT2X50
C102 3” x 25 yd	17-102P3	Light 3” x 25 yd	17-LIGHT3
C102 4” x 25 yd	17-102P4	Light 4” x 25 yd	17-LIGHT4
C102 6” x 25 yd	17-102P6	Light 6” x 25 yd	17-LIGHT6

STRAIGHT EDGE POLYESTER LINEAR SURFACE TAPES	
C102 1” x 50 yd	17-102S1
C102 1.5” x 50 yd	17-102S15
C102 2” x 50 yd	17-102S2
C102 3” x 50 yd	17-102S3
C102 4” x 50 yd	17-102S4
C102 6” x 50 yd	12-102S6



PINKED EDGE BIAS TAPES	
Bias 2” x 25 yd	17-BIAS2
Bias 3” x 25 yd	17-BIAS3
Bias 4” x 25 yd	17-BIAS4

RIB LACE REINFORCING TAPES	
Polyester-Adhesive coated 60 yd spools	
1/4” 60 yd	17-RT4
3/8” x 60 yd	17-RT3
1/2” x 60 yd	17-RT2

POLYESTER THREAD & CORD	
Machine Sewing, 500 yd	17-TM
Hand Sewing, 250 yd	17-TH
Rib Lacing Standard Round, 400 yd	17-TS
Rib Lacing Braided Flat, 500 yd	17-TF

Spencer Aircraft provides the information in this catalog for its customers as a ***reference only*** and it is not intended for design or guarantee of accuracy. Though it is our policy to ship all orders in a timely manner, Spencer Aircraft cannot guarantee that all items will be in stock at all times.



NITRATE DOPES AND THINNER	
20-210	210 Tautening Nitrate (Clear)
20-E4964	E-4964 Non-Tautening Nitrate (Clear)
20-G6302	G-6302 Rand-O-Proof Non-Tautening Nitrate (Green)
20-W7868	W-7868 Non-Tautening Nitrate (Blue)
20-286	286 Nitrate Thinner



BUTYRATE DOPES AND THINNER	
20-9701	9701 Tautening Butyrate (Clear)
20-A1690	A-1690 Non-Tautening Butyrate (Clear)
20-W8350	W-8350 Non-Tautening Butyrate (Tan)
20-G6303	G-6303 Rand-O-Fill Non-Tautening Butyrate (Silver)
20-9703	9703 Butyrate Thinner





AIRCRAFT ENAMELS	
(See Randolph Color Card Part No. 11-CCARDRAN)	
23-(color no.)	All Whites (New Insignia, Randolph, Juneau, Daytona, Vestal, Tropic)
23-(color no.)	All Other Colors
23-257	257 Enamel Thinner
23-E9313	E-9313 Enamel Hardener/Gloss Additive



COLORED BUTYRATE DOPES	
(See Randolph Color Card Part No. 11-CCARDRAN)	
21-(color no.)	All Whites (New Insignia, Randolph, Juneau, Daytona, Vestal, Tropic)
21-(color no.)	All Other Colors

FAST DRY ENGINE ENAMELS	
24-303	303 Black
24-D5973	D-5973 Continental Gold
24-G5436	G-5436 Lycoming Gray

RANTHANE HS - HIGH SOLIDS POLYURETHANE	
(See Randolph Color Card Part No. 11-CCARDRAN)	
22-(color no.)	All Whites (New Insignia, Randolph, Juneau, Daytona, Vestal, Tropic)
22-(color no.)	All Other Colors
22-AUCAT2X1	AU-CAT-2X1 Catalyst for HS Ranthane 2:1
22--G4200	G-4200 Ranthane Thinner
22-D7201	D-7201 Ranthane Accelerator

RANDOLPH MARK II FOR METAL	
(See Randolph Color Card Part No. 11-CCARDRAN)	
28-(color no.)	All Whites (New Insignia, Randolph, Juneau, Daytona, Vestal, Tropic)
28-(color no.)	All Other Colors
28-ML	Mark II Mixing Liquid
28-THINNER	Mark II Thinner

Spencer Aircraft provides the information in this catalog for its customers as a ***reference only*** and it is not intended for design or guarantee of accuracy. Though it is our policy to ship all orders in a timely manner, Spencer Aircraft cannot guarantee that all items will be in stock at all times.

SPECIAL PRODUCTS	
20-Y9910	Y-9910 Universal Retarder
20-J3000	J-3000 Butysolv Rejuvenator
20-701	701 Aluminum Paste
20-345	345 Acid Proof Battery Box Black Paint
20-FL	Float Lacquer
20-X1567B	X-1567B Wing Walk Compound Black MIL-W.5044 Type 2
20-X1567G	X-1567B Wing Walk Compound Gray MIL-W.5044 Type 2
20-C2210	C-2210 Paint Surface Cleaner











SOLVENTS	
25-ACE	1200 Acetone
25-IPA	1000 Isopropyl Alcohol
25-MEK	1100 Methyl Ethyl Ketone (MEK)
25-TOL	1500 Toluene / Toluol

EPOXY PRIMERS & VARNISH	
20-W2248	W-2248 EP-420W Epibond Epoxy Primer (White)
20-B6433	B-6433 EP-420G Rand-O-Plate Epoxy Primer (Dark Green)
20-400	EV-400 Epoxy Varnish
EPOXY THINNER / ACCELERATOR	
20-500	E-500 Thinner
20-501	EX-501 Accelerator
CATALYSTS	
20-430	EP-430 Primer Catalyst
20-410	EV-410 Varnish Catalyst



253-848-9349
SpencerAircraft.com

Spencer Aircraft provides the information in this catalog for its customers as a ***reference only*** and it is not intended for design or guarantee of accuracy. Though it is our policy to ship all orders in a timely manner, Spencer Aircraft cannot guarantee that all items will be in stock at all times.

TUBES

BY MANUFACTURER

MANUFACTURER	SIZE	STEM TYPE	MODEL NUMBER	USE WITH SPECIFIC TIRES
AERO CLASSIC LEAKGUARD	400 X 6	90°		
	500 X 5			
	600-6	STRAIGHT		
	280/250-4	90°		
	410/350-4			
	12.5-4.5			
	700/800-6	STRAIGHT		
	650/700-8			
	650-10			
	750-10			
	850-10			
	15/600-6			
	600-6	70°		
AIR TRAC	5.00-5	TR67A 90°	XA1AC	
	6.00-6	TR20 STRAIGHT	XA1AD	
	15x6.00-6		XA1AE	
	6.50/7.00-8	TR15 STRAIGHT	XA1AJ	
	6.50-10	TR25 STRAIGHT	XA1AK	
	7.00 / 8.00-6 (1)	TR20 STRAIGHT	XA1AF	
	7.50-10	TR25 STRAIGHT	XA1AL	
	8.50-10	TR20 STRAIGHT	XA1AH	
	29 X 11	TR193 90°	XA1AN	
	12.5 X 4.5	TR67A 90°	XA1AX	
	3.50 X 4.10-4	TR87A 90°	XA1AB	
GOODYEAR BUTYL FLIGHT MATE™	5.00-4	AC21 90°		
		TR67 90°		
	5.00-5	TR67A 90°		5.00-5 & G380x150-5 15x6.00-5
	6.50-10	TR25 STRAIGHT		
	7.00 / 8.00-6	TR20 STRAIGHT		7.00-6 & 8.00-8
	7.50 / 8.50-10	TR20 STRAIGHT		
	8.50-6	TR20 STRAIGHT		
	8.90-12.50	TR25 STRAIGHT		
	G15 / 6.00-6	TR67A 90°		
		TR20 STRAIGHT		6.00-5 & 15x6.00-6
	G19.5x6.75-8	TR15 STRAIGHT		6.50-8 , 19.50x6.75-8 & 22x8.00-8
MICHELIN AIRSTOP	15x6.0-6	TR20 STRAIGHT	097-500-0	
	15x6.0-6 (H60 TW)	TR67 90°	092-501-0	
	22x8.0-8	TR15 STRAIGHT	097-534-0	
	29 X 11.0-10		097-445-0	
	5.00-4	TR67 90°	097-300-0	
	5.00-5	TR67A 90°	092-308-0	
	6.00-6	TR20 STRAIGHT	092-500-0	
	6.50-10	TR20 STRAIGHT	092-344-0	
	6.50-8	TR15 STRAIGHT	092-337-0	
	7.50-10	TR25 STRAIGHT	097-373-0	
	7.00-6 / 8.00-6	TR20 STRAIGHT	092-318-0	
	8.50-10	TR25 STRAIGHT	092-348-0	
	8.90-12.50	TR15 STRAIGHT	097-383-0	
	355x150-4	90°	097-543-0	
AZUSA	410/350 x 6		7133	
	410/350 x 4		7130	
	410/350 x 5		7132	
	340/300 x 5		7131	
	280/250-4		7129	
	13X6.50-6	STRAIGHT	7141	
	800 X 6	90°	7138	
	16-650/750 X 8	STRAIGHT	7118	
	15-600 X 6	90°	7125	
	11-600 X 5		7116	
	18-950 X 8	STRAIGHT	7120	
	480/400 X 8		7121	
	13-500 X 6	90°	7136	
GENERIC	4.10 X 3.5 X 5		TIO112	
	15-600 X 6		TIO112	
	800 X 6		TI007	





"LEAKGUARD" BUTYL TUBE
(New Easy Flate Valve)

New EASY INFLATE Valve Makes Inflation Less Of A Chore. Valve Is Angled Toward You, Easier To Inflate, Easier To Check The Pressure. "LEAKGUARD®" Inner Tubes Are Blended With A Proprietary Leak Resistant Compound For Less Maintenance.

"LEAKGUARD®" Butyl Inner Tubes Are Blended With A Proprietary Leak Resistant Compound For Less Maintenance. Aero Classic provides more aircraft tubes to the US Military than any other manufacturer. Aero Classic tubes are FULL SIZE, not stretch to fit.

Note: Angled "Easy Flate" valves may not work with hubcaps.











Spencer Aircraft provides the information in this catalog for its customers as a ***reference only*** and it is not intended for design or guarantee of accuracy. Though it is our policy to ship all orders in a timely manner, Spencer Aircraft cannot guarantee that all items will be in stock at all times.

TIRES

Aircraft tire treads are designed for different uses.

A) Rib tread designed for use on paved surfaces. It is the most common aircraft tire tread design.

B) Diamond tread designed for unpaved runways.

C) All weather tread that combines a ribbed center tread with a diamond tread pattern of the edges.

D) Smooth tread tire found on older, slow aircraft without brakes designed for stopping.

E) Chine tire used on the nose gear of aircraft with fuselage mounted jet engines to deflect runway water away from the engine intake(s).



MANUFACTURER	MODEL	NAME	MAIN TIRE		AUXILIARY TIRE	
			TIRE SIZE	PLY RATING	TIRE SIZE	PLY RATING
AEROSPATIALE	SN-600	CORVETTE	26x6.6	10 TL	17.5x6.25-6DDT	8 TL
AMERICAN	--	DECATHLON	6.00-6/8.00-6	4 / 6	SCOTT	--
CHAMPION AIRCRAFT		CITABRIA	6.00-6			
		--	7.00-6	6.00-6/8.00-6		
			8.00-6			
AYRES	THRUSH		11.00-12	10	12-1/2 x 4-1/2	4
	S2RT15	THRUSH	29x11.00-10	10 TL		
	S2R		8.50-10			
COMMANDER AIRCRAFT	112	COMMANDER	6.00-6	6	5.00-5	
	112B	--	7.00-6			6
	112TC , TCA					
	114					
	114A , B		6.00-6			
BEECH AIRCRAFT (RAYTHEON)	C-17R	STAGGERWING	7.50-10		10.00SC	--
	BE 18	TWIN BEECH	11.00-12	8 TL	14.50SC	8 TL
	BE 18H		8.50-10		8.50-10	
	BE 19	MUSKETEER SPORT	6.00-6	4	6.00-6	4
	BE 23	MUSKETEER				
	BE23C , BE-A24	SUNDOWNER				
	BE 24-R	SUPER SIERRA			5.00-5	
	BE 33A	BONANZA	7.00-6	6		
	BE 35					
	BE 36					
	BE 50	TWIN BONANZA	8.50-10		6.50-10	
	BE B55	BARON	6.50-8	8	5.00-5	6
	BE C55					
	BE E55					
	BE 58					4
	BE 60	DUKE	19.5x6.75-8	10 TL	15x6.00-6	
	BE 65	QUEEN AIR	8.50-10	8 TL	6.50-10	6 TL
	BE-80					
	BE-C90B	KING AIR				
	BE-B200	SUPER KING AIR	18 x 5.5	10 TL	22x6.75-10	8 TL
	BE-200T		22x6.75-10	8 TL		
	BE-99	--	18x5.5		6.50-10	6 TL
	BE-300/350	SUPER KING AIR	22x6.75-10		19.5x6.75-8	10 TL
	BE-2000	STARSHIP I	H19.5x6.75-10		19x6.75-8	
	BE-400	BEECHJET / DIAMOND I	24x7.7	16 TL	18x4.4	10 DDT
	BE 1900	AIRLINER	22x6.75-10	8 TL	19.5x6.75-8	10 TL
	BE 1900D			10 TL		
BELLANCA	260A	BELLANCA	6.00-6	6	6.00-6	4
	17-30A	VIKING			15x6.00-6	6 / 8

253-848-9349
SpencerAircraft.com

Spencer Aircraft provides the information in this catalog for its customers as a ***reference only*** and it is not intended for design or guarantee of accuracy. Though it is our policy to ship all orders in a timely manner, Spencer Aircraft cannot guarantee that all items will be in stock at all times.

TIRES

MANUFACTURER	MODEL	NAME	MAIN TIRE		AUXILIARY TIRE	
			TIRE SIZE	PLY RATING	TIRE SIZE	PLY RATING
BELLANCA	17-31A	SUPER VIKING	6.00-6	6	15x6.00-6	6 / 8
	17-31ATC	TURBO VIKING				
	7GCAA	CITABRIA		4	5.00-5	4
	7KCAB		7.00-6			
	8KCAB	DECATHLON	8.00-6			
	8GCBC	SCOUT	8.50-6	4 / 6		
BAe	HS-125	--	23x7.00-12BR	12 TL	18x4.25-10 DT	6 TL
HAWKER	(400 / 600 / 700 / 800 / 1000)		--		--	
BOMBARDIER	CL-600 / 601	CHALLENGER	26x6.6	14 TL	18x4.4 DT	12 TL
			25.75x6.75-14			
	CL604		H27x8.5-14	16 TL		
	--	GLOBAL EXPRESS	H38x12.0-19	20 T:	21x7.25-10 DT	
CESSNA (TEXTRON)	120 , 140	--	6.00-6	4	5.00-5	4
	150 , 152	COMMUTER AEROBAT				
	172	SKYHAWK				
	R172	HAWK XP				
	172 Q	CUTLASS		6		
	172 RG	CUTLASS RG	15x6.00-6			
	175	SKYLARK	6.00-6	4		
	177	CARDINAL		6		
	177 RG	CARDINAL RG	15x6.00-6			
	180	SKYWAGON	6.00-6		8.00 SC	6
	182 , T182	SKYLANE			5.00-5	
	182RG , T182RG		15x6.00-6			4
	185	SKYWAGON	6.00-6		8.00 SC	8
	188	AG WAGON	22x8.00-8		10.00 SC	6
		AG WAGON (OPTIONAL)	8.50-10			8
	205	--	6.00-6		5.00-5	6
	206	STATION AIR				
	206 , 207	OPTIONAL	8.00-6		6.00-6	4
	207	SKYWAGON	6.00-6	8		8
	208 (FLO)	CARAVAN	8.50-10		22x8.00-8	6
	208 (STA)		6.50-10		6.50-8	8
	210	CENTURION	6.00-6		5.00-5	6
	T210 , P210	TURBO , CENTURION				10
	T303	CRUSADER			6.00-6	6
	T303	OPTIONAL	6.50-8			
	310 , T310	--	6.50-10	6		4
	320 , 340					
	336		6.00-6		15x6.00-6	6
	337	SUPER SKYMASTER	18x5.5	8		
	401 , 402	--	6.50-10		6.00-6	
	404	TITAN	22x7.75-10	10 TL		
	411	--	6.50-10	8		
	414	CHANCELLOR				
	421	GOLDEN EAGLE	6.50-10	8	6.00-6	6
	425	CONQUEST I		10		
	441	CONQUEST II	22x7.75-10	10 TL		
	500	CITATION I	22x8.00-10		18x4.4 DDT	10 TL
	525	CITATION JET	22x6.50-1			6 TL
	550	CITATION II S/N 2-626	22x8.00-10			10 TL
		CITATION II S/N 627 & UP		12 TL		

Spencer Aircraft provides the information in this catalog for its customers as a ***reference only*** and it is not intended for design or guarantee of accuracy. Though it is our policy to ship all orders in a timely manner, Spencer Aircraft cannot guarantee that all items will be in stock at all times.

TIRES

MANUFACTURER	MODEL	NAME	MAIN TIRE		AUXILIARY TIRE	
			TIRE SIZE	PLY RATING	TIRE SIZE	PLY RATING
CESSNA (TEXTRON)	550	BRAVO	H22x8.25-10	14 TL	18x4.4 DDT	10 TL
	650	CITATION III	22x5.75-12	10 TL		
	560	CITATION V	22x8.00-10	12 TL		
	BPC 560	ENCORE		14 TL	18x4.4	
	650	CITATION VI		10 PR	18x4.4 DDT	
		CITATION VII				
	750	CITATION X		14 PR	16x4.4 DT	
CIRRUS DESIGN	SR20	--	15x6.00-6	6	5.00-5	6
	SR22					
DASSAULT	10	FALCON	22x5.75-12	10 TL	18x5.75-8	8 TL
	20		26x6.6 OR 26x6.6 R14		13x5.0-4 DT	14 TL
					14.5x5.5-6 DT	
	50 / 200			14 TL		
EMBRAER / NEIVA	EMB-200	IPANEMA	6.50-8	8 TT	2.80/2.50-4	4 TT
	EMB-201		8.50-10	8 / 10 TT	10x3.50-4	
	EMB-202	IPANEMAO				
GULFSTREAM AEROSPACE	AE-680 T	TURBO COMMANDER		10 TL	16x4.4	4 TL
	AE-680 V	--	8.50-10	8 TL	6.00-6	6 TL
	AE-680 W					
	AE-681					
	AE-685					
	AE-690 , 690A , 690B					
	AE690C			10 TL	15x6.00-6	6
	AE-720			8 TL	6.00-6	6 TL
	112		6.00-6	6	5.00-5	4
	112TC		7.00-6			6
	114					
	G-159	GULFSTREAM I	7.50-14	12 TL	6.50-8	6 TL
	G-158	AG-CAT	8.50-10	6	10	8
	--	GULFSTREAM II	34x9.25-16	18 TL	21x7.25-10 DT	12 TL
		GULFSTREAM III , IV				
		GULFSTREAM IVSP	H34x9.25-18			
		GULFSTREAM V	H35x11.0-18	20 PR		
	AA-1B	TRAINER	6.00-6	4	5.00-5	4
	AA-5	TIGER		6		
	--					
		CHEETA		4		
	GA-7	COUGAR		6	15x6.00-6	6
	AE-200	COMMANDER	7.00-6		6.00-6	4
	AE-500 , B , U , S		8.50-10	8 TL		6 TL
	AE-560 , 560A			6 TL		
	AE-560E , F			8 TL		
	AE-680 , 680E					
	AE-680F					
	AE-680FP					
	AE-680FL	GRAND COMMANDER				
	AE-680FLP	GRAND COMMANDER P				
HELIO	H-250	COURIER	8.00-6	4	10	8
		COURIER II				
		COURIER (XWD)	6.50-8	6		
	H-295	SUPER COURIER	8.00-6			
		SUPER COURIER (XWD)	6.50-8			
	H-550A	STALLION	7.50-10	8	5.00-5	4
	H634	TWIN STALLION				

253-848-9349
SpencerAircraft.com

Spencer Aircraft provides the information in this catalog for its customers as a ***reference only*** and it is not intended for design or guarantee of accuracy. Though it is our policy to ship all orders in a timely manner, Spencer Aircraft cannot guarantee that all items will be in stock at all times.

TIRES

MANUFACTURER	MODEL	NAME	MAIN TIRE		AUXILIARY TIRE	
			TIRE SIZE	PLY RATING	TIRE SIZE	PLY RATING
ISREAL AIRCRAFT INDUSTRIES	1121 , AE , 1121	JET COMMANDER	24x7.7	14 / 16 / 18 TL	16x4.4	4 TL
	1123	WESTWIND	24x7.7	18 TL		
	1124		B24x9.50-10.5			
	1125	ASTRA	23x7.00-12	12 TL	16x4.4 DT	6
LAKE AIRCRAFT	LA-4	BUCCANEER	6.00-6	4	5.00-4	4
	LA-250	RENEGADE / SEAFURY		6	5.00-5	
	LAP4-200	AMPHIBIAN			5.00-4	
BOMBARDIER	LR-23	LEARJET	18x5.5	10 TL	18x4.4 DDT	10 TL
	LR-24					
	LR-25					
	LR-35 / 36 , 35A , 36A		17.5x5.75-8	12 TL		
	LR-54 , 55 , 56			14TL		
	LR-60					
LOCKHEED	--	JET STAR	26x6.6		18x4.4 DT	
		JET STAR II				12 TL
MAULE AIR	MX-7-160	--	7.00-6	4 / 6	280/250-4	4
	MXT-7-160					
	M-8-235					
	MX7-420					
MITSUBISHI	MU-2B	--	8.50-10	8	5.00-4 (PreSB072)	6
					5.00-5 (PostSB072)	
	MU-2B-10/15				5.00-4 (S/N101-115)	
					5.00-5 (S/N116-120)	
	MU-2B-20 , 25				5.00-5	
	MU-2B-26 , 30 , 35 , 36 , 40 , 60			10		
	MU-3 DIAMOND		--			
MOONEY	MO-20	RANGER	6.00-6	6	5.00-5	4 / 6
	MO-21C	SUPER				
	MO-22	MUSTANG			15x6.00-6	6
	MO-22E	CHAPPARAL			5.00-5	4
	MO-20F	EXECUTIVE				6
	MO-20J	201				
	MO-20K	TURBO 231				
	M-20K	TSE				4
	M-20M	BRAVO				6
	M-20S	EAGLE				
	M-20R	OVATION				
PARTENAVIA	P68C	--				
PIPER	J3	CUB	8.00-4	4	8.00 SC	SOLID
	PA18-135	SUPER CUB	6.00-6			
	PA18-150				6x2.00	
	PA22	TRI PACER		6	6.00-6	6
	PA23 , 160-235	APACHE	7.00-6			4
	PA23-250	AZTEC		8		
	PA24-180	COMMANCHE	6.00-6	4		
	PA24 , 250 , 260 , 400		6.00-6	6		4 / 6
	PA25-150	PAWNEE	7.00-6	4	8x3.00-4	4
	PA25 , 236 , 260		8.00-6			
	PA28R-201	ARROW	6.00-6	6	5.00-5	
	PA28-140	CHEROKEE		4	6.00-6	
	PA28-150					
	PA28-151 , 161	WARRIOR			5.00-5	
	PA28-160	CHEROKEE			6.00-6	

Spencer Aircraft provides the information in this catalog for its customers as a ***reference only*** and it is not intended for design or guarantee of accuracy. Though it is our policy to ship all orders in a timely manner, Spencer Aircraft cannot guarantee that all items will be in stock at all times.

TIRES

MANUFACTURER	MODEL	NAME	MAIN TIRE		AUXILIARY TIRE	
			TIRE SIZE	PLY RATING	TIRE SIZE	PLY RATING
PIPER	PA28-180	CHEROKEE	6.00-6	4	6.00-6	4
	PA28-181	ARCHER			5.00-5	
	PA28-235	CHEROKEE			6.00-6	
	PA30	TWIN COMMANCHE				6
	PA31	NAVAJO	6.50-10	8	6	
		CHIEFTAIN			6.00-6	
	PA31T	NAVAJO		10		
	PA31P	PRESSURIZED NAVAJO		8		8
	PA31T-500	CHEYENNE 1A		10		6
	PA32	6-300	6.00-6	6		
	PA32RT300	LANCE		8		4
	PA31P-350	MOJAVE	6.50-10		17.5x6.25-6	10
	PA34-220	SENECA	6.00-6		6.00-6	6
	PA36	BRAVE	8.50-10	6	10x3.5-4	
	PA38	TOMAHAWK	6.00-6		5.00-5	
	PA42	CHEYENNE IIIA	6.50-10	12 TL	17.5x6.25-6	10
	PA44-180	SEMINOLE	6.00-6	6	6.00-6	6
	600 / 601B (PA60)	AEROSTAR	6.50-8	TL		
	601P (PA60-601 P)			8 TL		
	602P (PA60-602 P)					
	700P (PA60-700 P)					
	PA46-350P	MALIBU MIRAGE	6.00-6	8	5.00-5	6
	PA34-270T	SENECA V			6.00-6	8
	PA44-180	SEMINOLE			5.00-5	6
	PA32R-301	SARATOGA II HP				
	PA32R-301T	SARATOGA II TC				
	PA28-181	ARCHER III		4 / 6	6.00-6	4
	PA28-161	WARRIOR III		4 / 6	5.00-5	
PZL-MIELIC	I-22	IRYDA	6.70x210-12	18 TL	6.70X210-12	18 TL
	M-26	ISKIERKA	6.00-6	8 TT	6.00-6	6 TT
	M-20	MEWA				
	M-28	SKYTRUCK	--		6.50-10	12 TL
SABRELINER	NA-40 / 60	SABRELINER	26x6.6	14 TL	18x4.4 DT	10 TL
	NAS60A / 65		26x6.75-14	16 TL		
	NA-75 / 75A			10 TL		
SINO SWEARINGEN	SJ-30-2	--	16x4.4	12 TL	16x4.4	6 DT
SOCATA	TB 10 / 200		6.00-6	6 TT	5.00-5	6 TT
	TB9 / 20 / 21 / 30		15x6.00-6		5.00-4	
	RALLYE		6.00-6.5	4 TT		
	TBM700		18x5.5	8 TL	5.00-5	10 TL
	TB360	TANGARA	6.00-6	6 TT	15x6.00-6	6 TT
TAYLORCRAFT	A , B , BC , D (L2M) BC12-D	--		4 TT	6x2	--
	F-19 , F-21 , F21A					
	F-22				8.00-3	TT
	F-22A				5.00-5	4 TT
	F-22B				8.00-3	TT
	F-22C				5.00-5	4 TT

253-848-9349
SpencerAircraft.com

Spencer Aircraft provides the information in this catalog for its customers as a ***reference only*** and it is not intended for design or guarantee of accuracy. Though it is our policy to ship all orders in a timely manner, Spencer Aircraft cannot guarantee that all items will be in stock at all times.

AVIATION HEADSETS

David Clark



H10-30
Mono, ideal choice for the first-time headset buyer (or as a spare)
20oz



One-X
Hybrid Electronic Noise Cancelling and Bluetooth
12.3oz



H20-10S
Stereo, advanced composite materials
19oz



Pro-X2
Passive, ideal for commercial pilots that fly low-noise aircraft
7.5oz

ASA

HS-1A
Stereo/Mono, perfect for the beginning student pilot
12oz





PILOT BAGS









Did you find the brand you were looking for?
If not we have many more in store! Please call for more information.

Spencer Aircraft provides the information in this catalog for its customers as a ***reference only*** and it is not intended for design or guarantee of accuracy. Though it is our policy to ship all orders in a timely manner, Spencer Aircraft cannot guarantee that all items will be in stock at all times.





253-848-9349
SpencerAircraft.com

Spencer Aircraft provides the information in this catalog for its customers as a ***reference only*** and it is not intended for design or guarantee of accuracy. Though it is our policy to ship all orders in a timely manner, Spencer Aircraft cannot guarantee that all items will be in stock at all times.

THREAD PITCHES

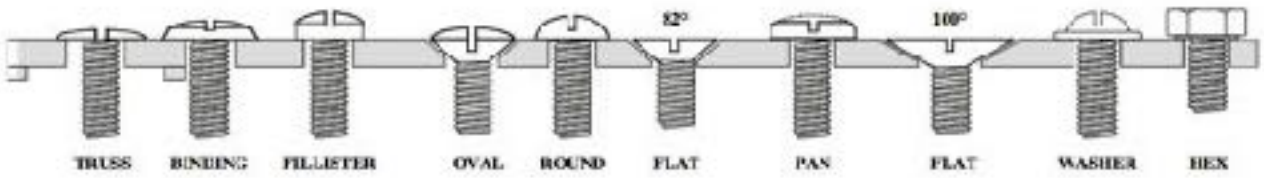

TAP SIZE	DIAMETER (IN)	DIAMETER (MM)
0000-160	0.021	0.5334
000-120	0.034	0.8636
00-90	0.047	1.1938
0-80	0.06	1.524
1-64	0.073	1.8542
1-72	0.073	1.8542
2-56	0.086	2.1844
2-64	0.086	2.1844
3-48	0.099	2.5146
3-56	0.099	2.5146
4-40	0.112	2.8448
4-48	0.112	2.8448
5-40	0.125	3.175
5-44	0.125	3.175
6-32	0.164	3.5052
6-40	0.164	3.5052
8-32	0.164	4.1656
8-36	0.164	4.1656
10-32	0.19	4.826
10-24	0.19	4.826
12-24	0.216	5.4864
12-28	0.216	5.4864
1/4-20	0.25	6.35
1/4-28	0.25	6.35
5/16-18	0.3125	7.9375
5/16-24	0.3125	7.9375

TAP SIZE	DIAMETER (IN)	DIAMETER (MM)
3/8-24	0.375	9.525
3/8-16	0.375	9.525
7/16-14	0.4375	11.1125
7/16-20	0.4375	11.1125
1/2-20	0.5	12.7
1/2-13	0.5	12.7
9/16-18	0.5625	14.2875
9/16-12	0.5625	14.2875
5/8-18	0.625	15.875
5/8-11	0.625	15.875
3/4-16	0.75	19.05
3/4-10	0.75	19.05
7/8-9	0.875	22.225
7/8-14	0.875	22.225
1-14	1	25.4
1-8	1	25.4
1 1/8-12	1.125	28.575
1 1/8-7	1.125	28.575
1 1/4-12	1.25	31.75
1 1/4-7	1.25	31.75
1 1/2-12	1.5	38.1
1 1/2-6	1.5	38.1
1 3/4-12	1.75	44.45
1 3/4-5	1.75	44.45
2-12	2	50.8
2-4 1/2	2	50.8

SPENCERAIRCRAFT.COM

sales@spenceraircraft.com
Phone: 253-848-9349
Fax: 253-848-5047

Pierce County Airport [KPLU]
16911 103rd Ave E
Puyallup WA 98374



$9.99

©2022 Spencer Aircraft Supply
D-0018, REV. 20220000001